HORIZONTAL METER TROUGHS • 100 AMP. PER POSITION. • 200 AMP. 600 VOLTS MAX. MAIN LUGS STUD TYPE

Product Specifications

- Conductor range: Line: 1/2" studs supplied standard
  Load: 6-1/0 AWG
- For underground service only
- Aluminum tunnel type connectors (load side)
- Factory prebussed from main lugs to each position
- Supplied with screw type rings
- Weatherproof Type 3R enclosure
- **Primarily used in:** B.C., *Sask., Man., Ont., Que.

NOTE: Models with suffix -VA = tunnel type connectors on line side provided instead of studs (required by B.C. Hydro)

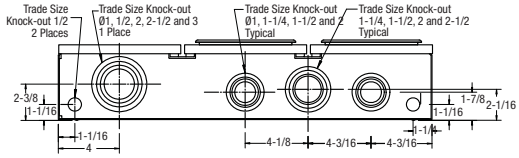

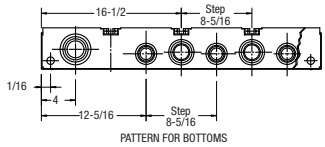

Note: Pattern for bottoms. Left hand entry is shown. For right-hand entry, unit is manufactured symetrically with hub openings, knock-out and line connections on right side.

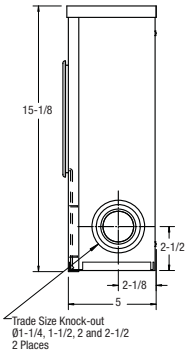

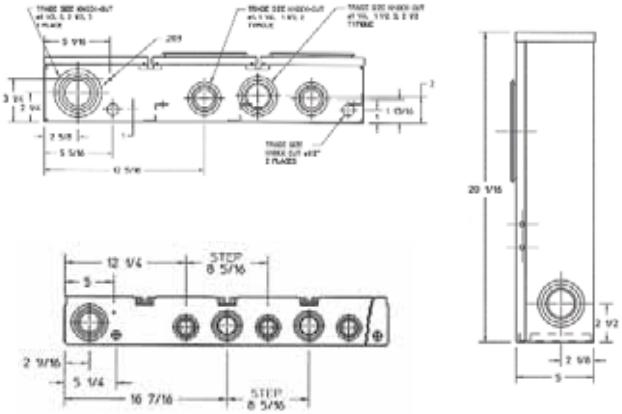

Dimensions are in inches

Ordering Information

CATALOGUE NUMBER		METER POSITION	DIMENSIONS (inches)			WEIGHT EACH	
			H	W	D	lb	kg
4 JAW							
LEFT-HAND ENTRY	RIGHT-HAND ENTRY						
BEC2-V	**BEC2-VH**	2 position	15-1/8	24-3/16	5	27	12.2
BEC2-VA	**BEC2-VAH**	2 position c/w connector	15-1/8	24-3/16	5	27	12.2
BEC2-VE*	**BEC2-VEH**	2 position	20-1/16	24-3/16	5	27	12.2
BEC3-V	**BEC3-VH**	3 position	15-1/8	33-1/8	5	35	15.9
BEC3-VA	**BEC3-VAH**	3 position c/w connector	15-1/8	33-1/8	5	35	15.9
BEC3-VE*		3 position	20-1/16	33-1/8	5	35	15.9
BEC4-V	**BEC4-VH**	4 position	15-1/8	41-7/16	5	43	19.5
BEC4-VA		4 position c/w connector	15-1/8	41-7/16	5	43	19.5
BEC4-VE*		4 position	20-1/16	41-7/16	5	43	19.5
BEC5-V	**BEC5-VH**	5 position	15-1/8	49-3/8	5	51	23.1
BEC6-V	**BEC6-VH**	6 position	15-1/8	57-5/8	5	59	26.8

Approved for copper or aluminum.