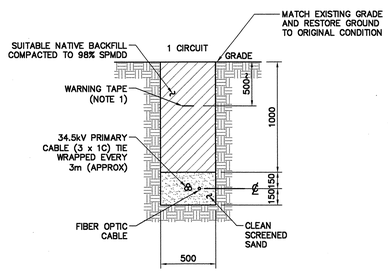

TYPICAL UNDERGROUND TRENCH DETAIL – 1 CIRCUIT

DETAIL 1 / – NTS

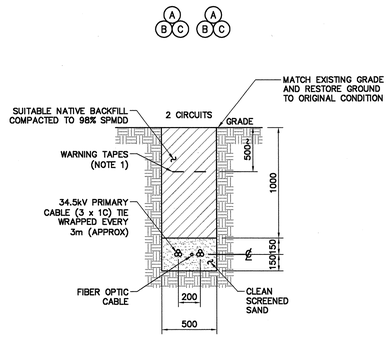

TYPICAL UNDERGROUND TRENCH DETAIL – 2 CIRCUITS

DETAIL 2 / – NTS

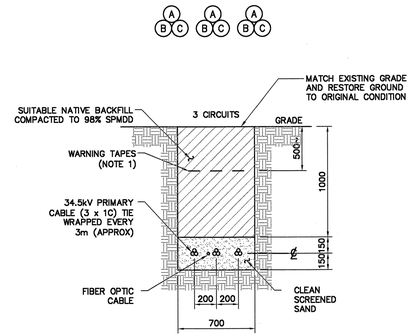

TYPICAL UNDERGROUND TRENCH DETAIL – 3 CIRCUITS

DETAIL 3 / – NTS

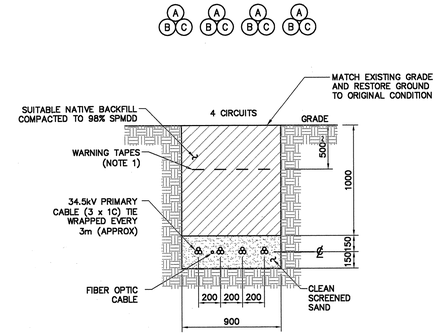

TYPICAL UNDERGROUND TRENCH DETAIL – 4 CIRCUITS

DETAIL 4 / – NTS

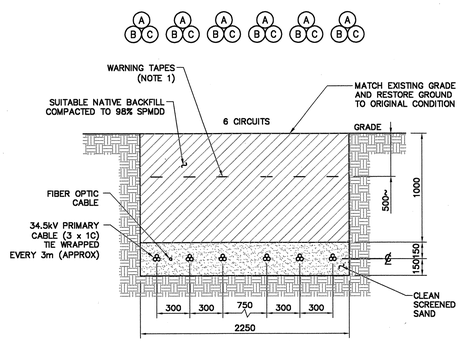

TYPICAL UNDERGROUND TRENCH DETAIL – 6 CIRCUITS

DETAIL 5 / – NTS

KEY PLAN

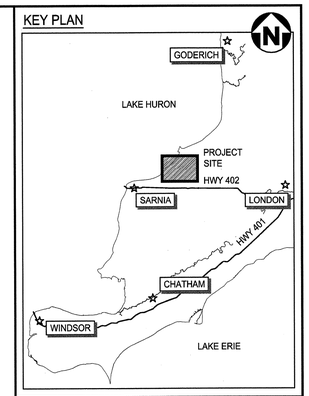

LEGEND:

NOTES:

1. WARNING TAPE SHALL BE PROVIDED FOR EACH CIRCUIT. THE TAPE SHALL BE BURIED ABOVE EACH CIRCUIT. ie SHALL BE SPACED 200MM CENTER TO CENTER FOR DETAILS 1 TO 4, AND 300MM FOR DETAIL 5.
2. ALL DIMENSIONS IN MILLIMETERS.

REV	DDMMMYY	REVISION / ISSUE DESCRIPTION	DRN	CHK	APP	APP	APP	APP
0	27NOV14	ISSUED FOR CONSTRUCTION	RS	KB	MU	GA		
D	05MAY14	ISSUED FOR BID	RS	KB	AF	GA		
C	02MAY14	ISSUED FOR REVIEW	RS	KB	AF	GA		
B	30APR14	ISSUED FOR SQUAD CHECK	RS	KB	AF	GA		
A	07FEB14	ISSUED FOR INFORMATION	RS	KB	AF	MU		

REF	NUMBER	TITLE
		REFERENCES

UNLESS OTHERWISE AGREED IN A WRITTEN CONTRACT BETWEEN AMEC AND ITS CLIENT: (I) THIS AMEC DOCUMENT CONTAINS INFORMATION, DATA AND DESIGNS THAT IS CONFIDENTIAL AND MAY NOT BE COPIED OR DISCLOSED, AND (II) THIS DOCUMENT MAY ONLY BE USED BY THE CLIENT IN THE CONTEXT AND FOR THE PURPOSE FOR WHICH IT WAS PREPARED. ANY OTHER USE, REPRODUCTION, OR RELIANCE ON THIS DOCUMENT BY ANY THIRD PARTY IS AT THAT PARTY'S SOLE RISK AND RESPONSIBILITY.

STAMP/SEAL

LICENSED PROFESSIONAL ENGINEER 61 LYCOMING STREET PROVINCE OF ONTARIO 26/11/28

PROJECT NO.	ACTIVITY NO.
173709	
SCALE	PACKAGE CODE
NTS	

	BY	DDMMMYY
DES	KB	FEB'14
DRN	RS	FEB'14
CHK	AF	FEB'14
APP	GA	FEB'14

SUBJECT: 34.5kV COLLECTOR SYSTEM TRENCH DETAILS

AREA 3000 — SUNCOR ENERGY CEDAR POINT II WIND POWER PROJECT

CLIENT DWG. NO.

DRAWING NO. 173709–0300–DF00–DTL–0001.001 REV. 0

COPYRIGHT © 2013

CAD FILE: P:\CAD\ELEC\173709-0300-DF00-DTL-0001.001.DWG

ISO A1-594x841

SAVED: 23-Nov-14 3:37 PM PLOTTED: 28-Nov-14 9:44 AM USER: SHAHBAZIAN, RAZMIK