*MODIFICATION TO DRAWING H343554-0000-70-082-0003 FROM HATCH

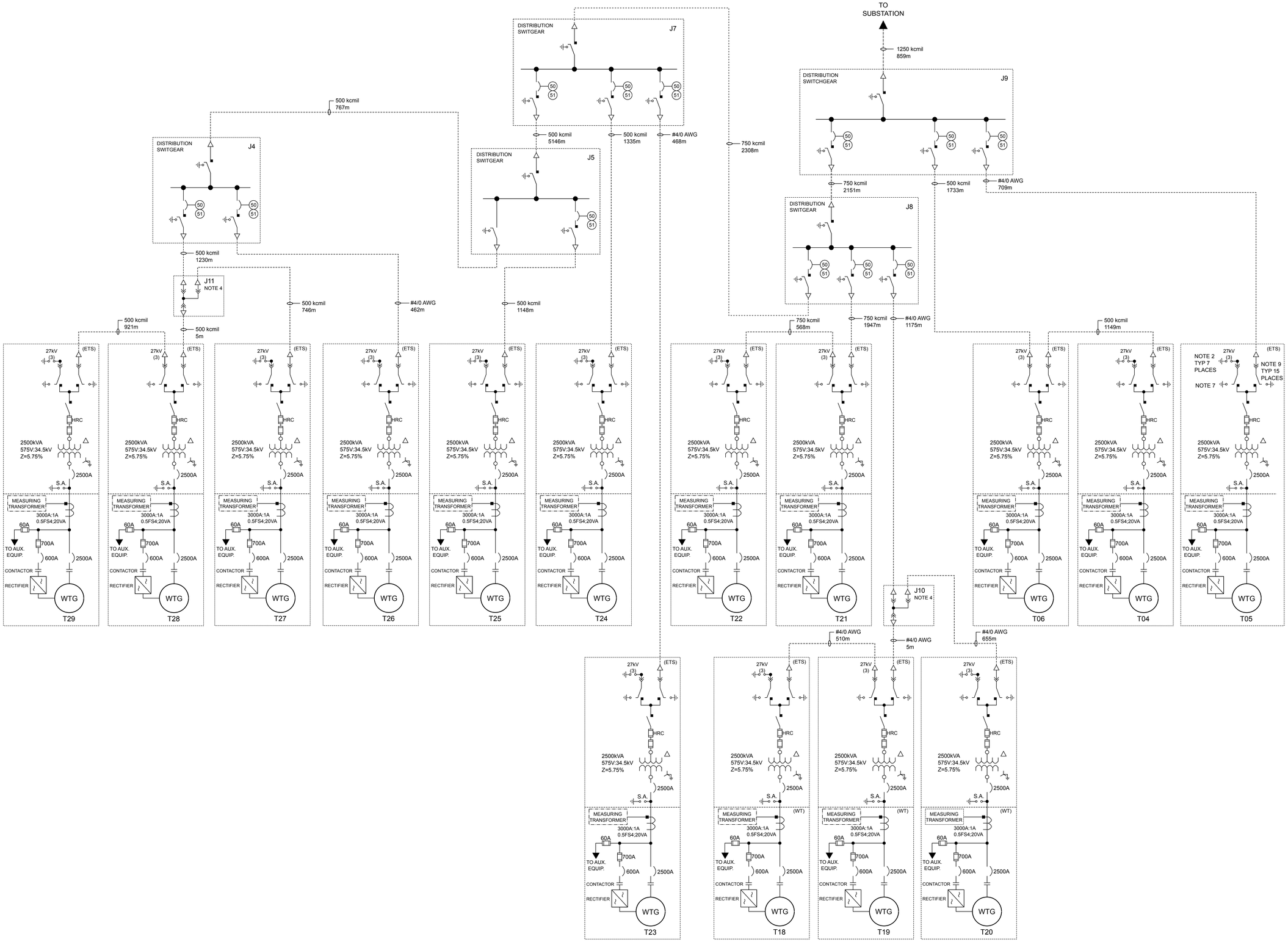

NOTES:

1. SURGE ARRESTOR SIZING IS PRELIMINARY.
2. SURGE ARRESTOR SHOWN AT WTG PADMOUNT SWITCHGEAR ARE ELBOW TYPE DISTRIBUTION CLASS ARRESTERS.
3. CONNECTIONS SHOWN ON WTG PADMOUNT SWITCHGEAR ARE INTENDED TO REPRESENT DEAD BREAK ELBOWS.
4. J10 & J11 ARE JUNCTION BARS ONLY AND MIGHT BE INCORPORATED INTO THE PADMOUNT TRANSFORMERs
5. SEPARATE BONDING CONDUCTOR TO BE RUN WITH EACH CIRCUIT.
6. THE USE OF SEL FAULT INDICATORS STRATEGICALLY THROUGH OUT THE NETWORK IS RECOMMENDED AND TO BE LOCATED DURING DETAIL ENGINEERING.
7. SWITCH ON LOAD BREAK WITH S/A TO BE LOCKED IN IN THE CLOSED POSITION.
8. ETS & WT ARE DESIGNED & SUPPLIED BY TURBINE VENDOR.
9. TURBINE VENDOR TO EVALUATE AND ADVISE REQUIREMENT FOR KEY INTERLOCK WITH UPSTREAM DISCONNECTING DEVICE.
10. CABLE LENGHTS ARE APPROXIMATE FOR CALCULATION PURPOSES TO BE CONFIRMED AT FINAL DESIGN.

LEGEND:

- - - - - - - - INDICATES UNDER GROUND CONDUCTOR 34.5kV OR URD TYPE MOISTURE BLOCK AL CONDUCTOR, 100% TRXLPE INSULATION, CONCENTRIC NEUTRAL UDPE JACKET.

ETS - EXTERNAL TRANSFORMER SYSTEM

WT - WIND TURBINE

DO NOT USE FOR CONSTRUCTION

WHITE PINES WIND FARM

wpd think energy
WPD CANADA CORPORATION
2233 ARGENTIA RD., SUITE 102
MISSISSAUGA, ON, L5N 2X7
T.: 905-813-8400
F.: 905-813-7487

PROVIDED BY	DEPARTMENT
DIEGO CUFINO	ENGINEERING

CIRCUIT 2
SINGLE LINE DIAGRAM

DOCUMENT STATUS	REVISION	
DRAFT	A	
DATE OF ISSUE	FORMAT	PAGE
01-04-16	12 X 18	2/2