Hydro One Networks Inc.
7th Floor, South Tower
483 Bay Street
Toronto, Ontario M5G 2P5
www.HydroOne.com

Tel: (416) 345-5393
Fax: (416) 345-6833
Joanne.Richardson@HydroOne.com

Joanne Richardson
Director – Major Projects and Partnerships
Regulatory Affairs

BY COURIER

August 30, 2018

Ms. Kirsten Walli
Board Secretary
Ontario Energy Board
Suite 2700, 2300 Yonge Street
P.O. Box 2319
Toronto, ON M4P 1E4

Dear Ms. Walli:

EB-2018-0257 – Hydro One Networks Inc.'s Section 92 - Côté Lake Mine Connection Project – Application and Evidence

Please find attached Hydro One Networks Inc.'s ("Hydro One") Application and Evidence in support of an Application pursuant to Section 92 of the Ontario Energy Board Act for an Order or Orders granting leave to upgrade and reenergize existing transmission line facilities (the "Côté Lake Mine Connection Project", or the "Project") located in the City of Timmins, District of Timiskaming (Unorganized, West Part), and the District of Sudbury (Unorganized, North Part).

An electronic copy of the complete application has been filed through the Ontario Energy Board's Regulatory Electronic Submission System (RESS).

Sincerely,

ORIGINAL SIGNED BY JOANNE RICHARDSON

Joanne Richardson

Exhibit List

Exh	Tab	Schedule	Attachment	Contents
A				
	1	1		Exhibit List
B				
	1	1		Application
	2	1		Project Overview
	3	1		Evidence In Support of Need
	3	1	1	Letter of Support from Customer
	4	1		Classification and Categorization
	5	1		Cost Benefit Analysis and Options
	6	1		Benefits
	7	1		Apportioning Project Costs and Risks
	8	1		Network Reinforcement
	9	1		Transmission Rate Impact
	10	1		Deferral Account
	11	1		Project Schedule
C				
	1	1		Physical Design
	2	1		Maps and Schematic Diagrams

Exh	Tab	Schedule	Attachment	Contents
C				
	2	1	1	Project Overview Map
	2	1	2	Schematic Diagram Existing
	2	1	3	Schematic Diagram Proposed
D				
	1	1		Operational Details
E				
	1	1		Land Matters
	1	1	1	Temporary Access and Temporary Access Road
	1	1	2	Temporary Construction Licence
	1	1	3	Damage Claim
F				
	1	1		System Impact Assessment
	1	1	1	IESO System Impact Assessment
G				
	1	1		Customer Impact Assessment
	1	1	1	Hydro One Customer Impact Assessment

ONTARIO ENERGY BOARD

IN THE MATTER OF the *Ontario Energy Board Act, 1998*;

AND IN THE MATTER OF an Application by Hydro One Networks Inc. pursuant to s. 92 of the *Ontario Energy Board Act, 1998,* for an Order or Orders granting leave to upgrade existing transmission line facilities (the "**Côté Lake Mine Connection Project**", or the "**Project**") located in the City of Timmins, District of Timiskaming (Unorganized, West Part), and the District of Sudbury (Unorganized, North Part).

And in the matter of an Application by Hydro One Networks Inc. pursuant to s. 97 of the *Ontario Energy Board Act, 1998,* for an Order or Orders granting approval of the forms of the agreement offered or to be offered to affected landowners.

APPLICATION

1. The Applicant is Hydro One Networks Inc. ("**Hydro One**"), a subsidiary of Hydro One Inc. The Applicant is an Ontario corporation with its head office in the City of Toronto. Hydro One carries on the business of, among other things, owning and operating transmission facilities within Ontario.

2. Hydro One hereby applies to the Ontario Energy Board (the "**Board**") pursuant to s. 92 of the *Ontario Energy Board Act, 1998* (the "**Act**") for an Order or Orders granting leave to upgrade circuit T2R and associated station facilities.

3. The transmission line facilities, each 115km kilometres in length, span between Timmins and Shiningtree. An overview map of this area is provided at **Exhibit C, Tab 2, Schedule 1, Attachment 1**, and a schematic diagram of the existing

facilities and the facilities after project completion can be found at **Exhibit C, Tab 2, Schedule 1, Attachments 2 and 3**.

4. The T2R facilities are required to facilitate a customer connection initiated by Iamgold Corporation ("Iamgold", or the "Customer"). The need for the T2R work is to successfully connect the Iamgold Côté Lake Mine Project to the Ontario transmission system[1]. Upgrading the T2R facilities will ensure that the Customer receives safe and reliable supply of electricity to support its commercial operations.

5. In concert with the T2R upgrade, Hydro One will also refurbish circuit T61S which, through laboratory testing, has been confirmed to be at end of service life. The end-of-life conductor has lost ductility and is therefore at increased risk of failure. The circuit requires refurbishing to continue to maintain existing service from these Hydro One facilities in a safe and reliable manner. Hydro One does not believe that work on the T61S line requires approval pursuant to s. 92 of the Ontario Energy Board Act, 1998, however, as it impacts the Project, Hydro One is providing information on that work.

6. Physically, the two circuits are situated on the same tower structure for the entire 115 km distance. Consequently, combining and coordinating the work for both lines simultaneously will produce operational and cost efficiencies by bundling the estimating, bulk procurement, design and construction activities of both projects. In addition to socio-economic benefits, this joint project planning approach will ultimately benefit Ontario ratepayers and the Customer by reducing the cost of the Project when compared to undertaking each project

[1] A separate leave to construct application has been filed by Iamgold for a 44 km line that will be constructed by the Customer. The related docket is EB-2018-0191.

independently. The cost-benefit analysis of the options explored is further discussed in **Exhibit B, Tab 5, Schedule 1**.

7. The proposed in-service date for the T2R component of the Project is August 2020, assuming a construction commencement date of September 2019 and the initiation of procurement activities in March 2019. The T61S component of the Project will be placed in service in June 2021. A project schedule is provided at **Exhibit B, Tab 11, Schedule 1**.

8. The lion's share of the Project will utilize the existing Hydro One right-of-way. The Iamgold connection will not require any additional land easements except for the connection tap to Iamgold north of Shiningtree DS, where additional right-of-way width is needed for tapping structures. This additional width will be situated on Ministry of Natural Resources and Forestry crown land, and the additional right of way requirement will be added to Hydro One's master Land Use Permit for Transmission. Temporary construction rights for access or staging areas may also be required for the duration of the construction period of the Project. Further information on land related matters is found at **Exhibit E, Tab 1, Schedule 1**.

9. This Project is a non-discretionary development project. The upgrade of the 115Kv circuit T2R is driven by a Customer-initiated load connection, and the adjacent end-of-life circuit, T61S, is being refurbished simultaneously for efficiency purposes. More details are provided in **Exhibit B, Tab 4, Schedule 1**.

10. The IESO has provided a System Impact Assessment ("**SIA**") filed as **Exhibit F, Tab 1, Schedule 1, Attachment 1**. The SIA indicates that the Project is expected to have no material adverse impact on the reliability of the integrated power system.

11. Hydro One has completed a final Customer Impact Assessment ("**CIA**") in accordance with Hydro One's connection procedures. The results confirm that there will be no impact on area customers as a result of the Project. A copy of the CIA is provided as **Exhibit G, Tab 1, Schedule 1, Attachment 1**.

12. The total cost of the Project is estimated to be $71.8M. The cost of energizing and upgrading T2R transmission line facilities is estimated to be $31.7M. The total cost of performing the refurbishment activities for the T61S transmission line facilities is estimated to be $37.4M. The details pertaining to these costs are provided at **Exhibit B, Tab 7, Schedule 1**. Transmission line upgrade work will also be carried out at Timmins TS to connect the T2R circuit to the Hydro One 115kV system. The transmission-related cost of the station work is estimated to be $2.7M.

13. Project economics, as filed in **Exhibit B, Tab 9, Schedule 1**, show that the Project will result in a positive impact (-$0.01/kW/month) in the network connection pool rate and a minor impact in the (+$0.01/kW/month) in the line connection pool. The net result is an almost neutral impact on the overall average Ontario consumer's electricity bill (0.00% rounded to two (2) decimal places). All costs associated with the T2R upgrade will be recovered from the Customer in accordance with the Transmission System Code.

14. This Application is also for approval of the forms of the agreement offered or to be offered to affected landowners, pursuant to s. 97 of the Act. The agreements are in the same form as previously approved in prior Hydro One leave to construct proceedings. The agreements can be found as attachments to **Exhibit E, Tab 1, Schedule 1**.

15. The Application is supported by written evidence which includes details of the Applicant's proposal for the transmission line and station work. The written evidence is prefiled and may be amended from time to time prior to the Board's final decision on this Application.

16. Given the information provided in the prefiled evidence, Hydro One submits that the Project is in the public interest. The Project meets the need of the transmission system and improves quality of service and reliability with minimal impact on price.

17. Hydro One is requesting a written hearing for this proceeding. Hydro One requests that a decision on this Application be provided as expeditiously as possible and no later than March 1, 2019. This approval is required in order for Hydro One to proceed with the necessary procurement activities to meet the in-service date requested by the Customer.

18. Hydro One requests that a copy of all documents filed with the Board be served on the Applicant and the Applicant's counsel, as follows:

a) The Applicant:

Linda Gibbons
Sr. Regulatory Coordinator
Hydro One Networks Inc.

Mailing Address:

7th Floor, South Tower
483 Bay Street
Toronto, Ontario M5G 2P5
Telephone: (416) 345-4479
Fax: (416) 345-5866
Electronic access: regulatory@HydroOne.com

b) The Applicant's counsel:

Michael Engelberg
Assistant General Counsel
Hydro One Networks Inc.

Mailing Address:

8th Floor, South Tower
483 Bay Street
Toronto, Ontario M5G 2P5

Telephone: (416) 345-6305
Fax: (416) 345-6972
Electronic access: mengelberg@HydroOne.com

Project Overview Documents

The Customer is developing a 72MW gold mine ("Côté Lake Mine" or "the mine") located 25km southwest of Gogama, Ontario. To supply power to the mine, Hydro One's currently idle 115kV T2R circuit will be reconductored and energized between Timmins Transformer Station ("TS") and Shiningtree Junction ("JCT")[1]. In addition, Hydro One will be required to construct a new station termination to connect the new T2R circuit to the 115kV yard at Timmins TS. At Shiningtree JCT, Hydro One will be installing a motorized disconnect switch which will serve to provide electrical isolation and define a demarcation point between Hydro One-owned assets and those owned by the Customer. All of these proposed facilities are subject to section 92 approval.

In concert with this non-discretionary customer-driven Project, Hydro One is proposing to simultaneously replace the existing conductor on the 115 kV circuit T61S to address end-of-life sustainment needs of these facilities. This work is being undertaken because both circuits share common steel towers along a common right-of-way that stretches 115km in length.

A project overview map is provided at **Exhibit C, Tab 2, Schedule 1, Attachment 1**. The map depicts the geographic location of the proposed facilities, the line sections which will be upgraded, as well as the location of the connecting transmission stations. **Attachments 2** and **3** of that same Schedule provide a schematic diagram of the existing and proposed facilities, respectively.

[1] The Customer will construct and own a new 44km circuit spanning between Shiningtree JCT to the Customer substation, located at the Côté Lake Mine. That work is part of a separate leave to construct application filed by Iamgold under docket EB-2018-0191.

Evidence In Support of Need

On September 13, 2017, Hydro One received a transmission connection application from Iamgold. As aforementioned, the transmission connection application is for the intended connection of Iamgold's proposed Côté Lake Mine.

To supply the required power to the Côté Lake Mine, Hydro One will complete two correlated, yet distinct, activities. The need for undertaking those activities is described below.

1. *Reconductor the idle 115kV T2R circuit from Timmins TS to Shiningtree JCT (115km)*

The T2R circuit must be upgraded in order to provide adequate supply capacity to the mine. The existing idle conductor is not able to safely and reliably supply Côté Lake mining facility, and overloading this conductor will cause clearance violations and deviate from Hydro One's transmission line design practice. Hydro One will utilize the smallest standard size of conductor suitable for this range of application - 411 kcmil Aluminum Conductor, Steel Reinforced ("**ACSR**") - which will provide supply capacity and will minimize the scope of any tower modifications required to accommodate the new conductor. Hydro One received a letter supporting the project from the Customer, Iamgold, and is provided as **Attachment 1** to this exhibit.

2. *Install new 115kV switching facilities at Timmins TS*

The idle T2R circuit presently terminates outside the Timmins transformer station, with no physical connection to a Hydro One electrical source. To energize this circuit and supply the Côté Lake Mine, Hydro One will need to connect T2R to existing network

infrastructure at Timmins TS, inside the station fence. New network facilities will include a high voltage circuit breaker, switches and protection and control facilities.

Together with this non-discretionary connection project, Hydro One will be advancing the refurbishment of circuit T61S that was originally scheduled for 2024. Hydro One is proposing to undertake this discretionary project at this time because T61S and T2R are on common towers. Combining and coordinating the work for both lines simultaneously will produce operational efficiencies by bundling the estimating, bulk procurement, design and construction activities of both projects. The need for the refurbishment work is described below.

3. Refurbish the 115kV T61S circuit from Timmins TS to Shiningtree JCT (115km)

Transmission circuit T61S between Timmins and Shiningtree was built in 1931 and contains 336 KCMIL ACSR 30/7 conductor that has been verified through laboratory testing to have neared end-of-life condition. This verified end-of-life conductor has lost ductility and is therefore at increased risk of failure. This investment will eliminate the safety and reliability risks associated with operating near end-of-life assets along circuit T61S between Timmins and Shiningtree. Circuit T61S provides supply to local Hydro One distribution customers as well as several mines and industrial customers in the area.

August 29th, 2018

SENT VIA EMAIL

Hydro One Networks Inc.
Email: mark.artymko@HydroOne.com

Attention: Mr. Mark Artymko, P.Eng.
Manager, Large Customer Account Management

Re: Hydro One Networks Inc. ("Hydro One")
Application for Leave to Construct – Côté Mine Project

We are writing to express IAMGold's full support for the Hydro One leave to construct application for the Côté Mine Project with the Ontario Energy Board ("**OEB**"). We would request Hydro One make the OEB aware of this letter and our support for the Hydro One application.

IAMGold is developing the Côté Gold Project which requires approximately 72MW of power for full operation. The Côté Gold Project will create hundreds of jobs, significant economic activity and more than $600 million in government revenue. As confirmed in EB-2018-0191, the existing infrastructure is unable to support the development of the mine and the re-conductoring of the T2R line by Hydro One is essential to meet the needs of the Côté Gold Project.

Granting leave to construct to each of the Hydro One application and IAMGold's leave to construct application, EB-2018-0191, is required as soon as possible to meet the 2020 in-service date for the mine. We would request Hydro One and the OEB proceed as expeditiously as possible to review and the application as soon as possible and in any event by February 2019.

Yours truly,

Steven Bowles

33430567.1

Project Classification and Categorization

Project Classification

Per the Board's filing guidelines, rate-regulated projects are classified into three groups, based on their purpose.

- Development projects are those which:
  - (i) provide an adequate supply capacity and/or maintain an acceptable or prescribed level of customer or system reliability for load growth or for meeting increased stresses on the system; or
  - (ii) enhance system efficiency such as minimizing congestion on the transmission system and reducing system losses.
- Connection projects are those which provide connection of a load or generation customer or group of customers to the transmission system.
- Sustainment projects are those which maintain the performance of the transmission network at its current standard or replace end-of-life facilities on a "like for like" basis.

Based on the above criteria, this Project's sub-components can be classified as both Connection and Sustainment, but the Project is being driven by the Connection component.

<u>Connection Project:</u> Re-energizing and reconductoring circuit T2R from Timmins TS to Shiningtree JCT and constructing switching facilities at Timmins TS to provide a new customer connection.

<u>Sustainment Project:</u> Refurbish circuit T61S from Timmins TS to Shiningtree JCT.

Project Categorization

The Board's filing guidelines require that projects be categorized to distinguish between a project that is a "must-do", which is beyond the control of the applicant ("non-discretionary"), from a project that is at the discretion of the applicant ("discretionary").

Non-discretionary projects may be triggered or determined by such things as:

a) mandatory requirement to satisfy obligations specified by regulatory organizations including NPCC/NERC or by the Independent Electricity System Operator (IESO);
b) a need to connect new load (of a distributor or large user) or new generation connection;
c) a need to address equipment loading or voltage/short circuit stresses when their rated capacities are exceeded;
d) projects identified in a provincial government-approved plan;
e) projects that are required to achieve provincial government objectives that are prescribed in governmental directives or regulations; and
f) a need to comply with direction from the Board in the event it is determined that the transmission system's reliability is at risk.

Based upon the above criteria, the T2R component of the Project is considered non-discretionary, as it is required to connect the Customer. The T61S component of the Project is considered discretionary.

Table 1: Categorization and Classification

		Project Need	
		Non-discretionary	Discretionary
Project Class	Connection (T2R)	**X**	
	Sustainment (T61S)		**X**

Cost Benefit Analysis and Options

TRANSMISSION ALTERNATIVES

The Customer requested that Hydro One provide electrical supply to the Côté Lake Mine facility. Given the location of the Customer site, Hydro One's alternatives for serving the Customer are limited to upgrading circuit T2R.

In the preliminary stages of the Project, Hydro One did consider building a new 115 kV transmission line adjacent to the existing T2R and T61S circuit, but this alternative was rejected as it would require greenfield construction activities, expose the Project to unnecessary environmental risk associated with building a greenfield transmission line and be inconsistent with Ontario Provincial Planning Policy[1].

Consequently, all alternatives were limited to upgrading circuit T2R, and all alternatives were assessed on the premise that the Customer will be constructing and owning the 44km transmission line from Shiningtree JCT to its mine site. To achieve this customer connection the following alternatives were considered:

Alternative 1 (preferred) – Re-energize and reconductor the T2R transmission line spanning from Timmins TS to Shiningtree JCT and connect this circuit to Timmins TS via 115kV network switching facilities (high voltage breaker and switches). In addition, Hydro One would refurbish the adjacent T61S circuit (which shares common transmission structures with T2R), advancing the in-service forecast for this line by

[1] Before consideration is given to developing new infrastructure and public service facilities:
a) the use of existing infrastructure and public service facilities should be optimized; and
b) opportunities for adaptive re-use should be considered, wherever feasible - Provincial Policy Statement (2014) under the *Planning Act* (Section 1.6.3)

three years to align the development and construction activities of both circuits. The total cost of this alternative is estimated to be $71.8M.

Alternative 2 – Re-energize and reconductor the T2R transmission line spanning from Timmins TS to Shiningtree JCT, and connect this circuit to Timmins TS via 115kV network switching facilities (high voltage breaker and switches). T61S refurbishment and T2R energization activities will not be conducted simultaneously. The T61S refurbishment would be completed as originally planned, with an in-service date of December 2024. The T2R refurbishment would still be placed in service to meet the Customers' desired Q2 2020 in-service date. The cost of pursuing this alternative is estimated to be $74.0M.

Alternative 1 provides a cost-effective solution that avoids duplicative expenditures and reduces customer interruptions that would otherwise occur with reconductoring each circuit via mutually exclusive projects.

Additionally, from a constructability perspective, structure modifications are triggered by the required ampacity rating of circuit T2R to meet Iamgold's load such that safe clearances are maintained. In so doing, the T61S side of the tower will also require modification work to balance and maintain structural integrity regardless of whether the remaining sustainment work is completed, i.e., replacing the existing conductor with 411 kcmil ACSR. Once the structure work has been completed, there would be minimal incremental work required to complete the T61S sustainment project. Therefore, given the minimal incremental work, it is prudent to complete these projects simultaneously.

As a result, Hydro One recommends the cost-effective solution, Alternative 1.

Benefits of the Project

Prior to receiving the Customer's Côté Lake Mine connection application, Hydro One planned to refurbish the T61S line and associated end-of-life facilities to achieve an in-service date of December 2024, resulting in an advancement of the in-service forecast for this line by more than three years, with an in-servicing of June 2021. Advancing this work to align development and construction activities with the T2R re-energization will allow the bundling of activities common to both circuits aimed at overall efficiencies, reliability improvements and cost savings to the benefit of the transmission ratepayers and the Customer, since both T2R and T61S share the same right-of-way and are strung on common steel towers.

1.0 QUANTITATIVE BENEFITS

The Côté Lake Mine Project encompasses the following quantitative benefits:

Increase Thermal Rating of 115km of T2R

This investment will increase the thermal limits of the 115km line section between Timmins TS and Shiningtree JCT to a minimum summer continuous rating of 450A with a new 411 steel-reinforced aluminum conductor ("ACSR") conductor. This increased conductor rating is required for Hydro One to supply power to the Côté Lake Mine.

Refurbish T61S conductor and associated line assets

This investment will replace the existing T61S conductor (and associated line assets as required) which are approaching end of life and are in need of full replacement by 2024. Hydro One will be replacing the existing conductor with a 411 kcmil ACSR. This is the smallest size of conductor typically used by Hydro One for this range of application and is commonly used in other transmission lines in Ontario. Due to the modifications to the

structures (increasing clearances) that is being done to complete the Iamgold connection, there may be a consequential thermal rating increase on the T61S circuit. This is a consequence of the Customer's connection and not the intended result of the refurbishment.

Site Preparation and Mobilization

By combining the two Projects there will not be redundant activities undertaken for site preparation. The anticipated savings for this is approximately $2.2M. Activities covered here include, but are not limited to, yard setup, rider poles for conductoring, equipment rental, vegetation clearing, snow removal, and mobilization and demobilization.

2.0 QUALITATIVE BENEFITS

The Côté Lake project encompasses the following qualitative benefits:

Reduced Customer Interruptions

By completing all the work once, there will be less impact on local customers and property owners.

Outage Constraint Management – Avoid Future Costs

By energizing T2R first, the subsequent T61S refurbishment work will have an alternate conductor to transfer load to, thereby minimizing the number and length of necessary outages to customers while reconductoring work is completed. Additionally, other potential costs that would otherwise need to be incurred during construction will be avoided, such as the construction of a bypass line or installing diesel generation to maintain customer load requirements, had the T2R line not been energized beforehand.

Apportioning Project Costs & Risks

The total cost of the Project is estimated to be $71.8 million. The Project costs are broken down into line and station work. The estimated capital cost associated with the line work of the T2R/T61S Project, including overheads and capitalized interest, is shown Table 1 below.

Table 1: Project Line Work Costs

	Estimated Cost ($000's)
Materials	13,000
Labour	25,210
Equipment Rental & Contractor Costs	14,625
Sundry	1,625
Contingencies	5,417
Overhead [1]	6,500
Allowance for Funds Used During Construction [2]	2,708
Total Line Work	**69,085**

Similar details, specific to the station work, are provided in Table 2 below.

[1] Overhead costs allocated to the project are for corporate services costs. These costs are charged to capital projects through a standard overhead capitalization rate. As such they are considered "Indirect Overheads". Hydro One does not allocate any project activity to "Direct Overheads" but rather charges all other costs directly to the project.

[2] Capitalized interest (or AFUDC) is calculated using the Board's approved interest rate methodology (EB-2006-0117) to the projects' forecast monthly cash flow and carrying forward closing balance from the preceding month.

Table 2: Project Station Work Costs

	Estimated Cost ($000's)
Materials	520
Labour	990
Equipment Rental & Contractor Costs	580
Sundry	60
Contingencies	220
Overhead [3]	260
Allowance for Funds Used During Construction [4]	110
Total Station Work	**2,740**

The cost of the work provided above allows for the schedule of approval, design and construction activities provided in **Exhibit B, Tab 11, Schedule 1**.

1.0 RISKS AND CONTINGENCIES

As with most projects, there are risks associated with estimating costs. Hydro One's cost estimate includes an allowance for contingencies in recognition of these risks.

1. The cost estimate and schedule assumes a Class EA Screening process of approximately eight months; however, there is a risk of the screening process to exceed that duration and may be subject to a full Class EA.

[3] Overhead costs allocated to the project are for corporate services costs. These costs are charged to capital projects through a standard overhead capitalization rate. As such they are considered "Indirect Overheads". Hydro One does not allocate any project activity to "Direct Overheads" but rather charges all other costs directly to the project.

[4] Capitalized interest (or AFUDC) is calculated using the Board's approved interest rate methodology (EB-2006-0117) to the projects' forecast monthly cash flow and carrying forward closing balance from the preceding month.

2. It is assumed that the majority of the line work on the T2R circuit will have sufficient construction clearances from the T61S live circuit that share the same transmission structures and that the tower modifications and T2R reconductoring can be done without a T61S outage. Similarly, it is assumed that work on T61S circuit can be done without an outage on the T2R circuit. There is a risk that extensive outages may be required and may result in increased cost and delays in the project.

3. Although it is expected that the construction at Timmins TS and on the T61S circuit require short minimal outages, there is a risk that the outages may not be approved in the anticipated timelines.

4. A budgetary estimate with AACE Class 4 (-30% / +50%) level of accuracy has been completed at the time of the leave to construct application. Until a detailed line inspection and a number of studies and surveys are completed, there is a risk of scope changes, including structural and foundation refurbishment resulting in increased cost and a delayed in-service date.

Cost contingencies that have not been included, due to the unlikelihood or uncertainty of occurrence, include:

- Labour disputes;
- Safety or environmental incidents;
- Significant changes in costs of materials since the estimate preparation;
- Any other unforeseen and potentially significant event/occurrence.

2.0 COSTS OF COMPARABLE PROJECTS

The Board's Filing Requirements for Electricity Transmission and Distribution Applications, Chapter 4, requires the Applicant to provide information about a cost comparable project constructed by the Applicant. For lines cost comparisons, Table 3 compares the line refurbishment cost of T2R/T61S with three line refurbishment projects in Northern and South West Ontario.

Table 3: Costs of Comparable Line Projects

Project	**D2L – Martin River Jct x Crystal Falls SS Line Refurbishment (South Section)**	**D9HS/D10S – DeCew TS to Glendale TS Line Refurbishment**	**Q5G/Q2AH Beamsville TS x Hamilton Beach TS (South West)**	**T2R/T61S Timmins TS x Shingingtree DS Line Refurbishment**
Technical	Double 115 kV circuit steel towers	Double 115 kV circuit steel towers	Double 115 kV circuit steel towers	Double 115 kV circuit steel towers, 411kcmil
Length (circuit km)	34	9	27	115
Project Surroundings (ex. Rural?)	Northern Ontario Rural	South West Rural and Urban	South West Rural and Urban	Northern Ontario Rural
Environmental Issues	Multiple crossings, river, railroad and highways	No major issues	No major issues	No major issues expected
In-Service Date	Sep-2016	Dec-2015	Dec-2007	*HONI (T2R):* Aug 2020 *HONI (T61S):* Jun 2021
Total Project Cost	**$17.5M (Actuals)**	**$6.3M (Actuals)**	**$15.4M (Actuals)**	**$69.1M (Estimate)**
Add: Escalation Adjustment (2%/year)	$1.44M (to 2020)	$0.66M (to 2020)	$4.52M (to 2020)	-
Total Comparable Project Costs	**$18.94M**	**$6.96M**	**$19.92M**	**-**
Total Cost/Circuit km	$557k/km	$773k/km	$738k/km	$601k/km

Three comparable projects have been provided to illustrate the reasonableness of the estimate to complete this Project. The Projects provided are the D2L – Martin River Jct x Crystal Falls SS Line Refurbishment, D9HS/D10S – DeCew TS to Glendale TS Line Refurbishment, and the Q5G/Q2AH Beamsville TS x Hamilton Beach TS Project.

T2R/T61S project benefits from economies of scale since design, procurement and other non-field related costs are spread over a greater line length. The longer the length of the refurbishment, the more cost savings on a per km basis. The cost of the D2L project was lower due to fewer steel tower modifications required, compared with the T2R project. The Q5G/Q2AH project required tower height extensions for 23% of the structures, compared to the T2R/T61S project, where approximately only 2% of the towers require height extensions.

Connection Projects Requiring Network Reinforcement

As part of this Project and in order to connect the Customer**,** new network facilities are being installed. The network facilities being installed are limited to:

- A new 115kV circuit breaker and associated switching equipment at Timmins TS
- New protection and controls at Timmins TS to connect the Côté Lake Mine CTS.
- New protection and controls at Porcupine TS to include the Côté Lake Mine CTS into the Northeast Load Rejection Scheme.

The costs associated with these network facilities amount to $2.7M and are captured as the station costs identified in Table 2 of **Exhibit B, Tab 7, Schedule 1**. In accordance with section 6.3.5 of the Transmission System Code, these costs will be paid by the Customer as the facilities are specifically required to complete the connection and would not have otherwise been incurred.

Transmission Rate Impact Assessment

1.0 ECONOMIC FEASIBILITY

The proposed Project comprises both line and network assets. The line assets, which are the currently idle 115kV T2R circuit that will be reconductored and energized between Timmins TS and Shiningtree JCT to supply power to the Customer, as well as the existing conductor on the 115 kV circuit T61S that will be replaced to address end-of-life sustainment needs, will be included in the Line Connection Pool for rate-making purposes. The Network assets, which are a new station termination to connect the new T2R circuit to the 115kV yard at Timmins TS, as well as the protection and control related investments at Porcupine TS, will be included in the Network Pool for rate-making purposes. Please refer to **Exhibit B, Tab 7, Schedule 1**, for information regarding the costs of the proposed work.

The mine was determined to meet the risk classification of a medium-high connection. Therefore, a 10-year discounted cash flow analysis of both the line connection pool and network pool work was conducted consistent with the economic evaluation requirements of the Transmission System Code to determine whether a capital contribution is required. The risk classification was determined in accordance with the methodology and requirements set out in Appendix 4 of the Transmission System Code and the Customer Risk Classification section of Section 2.5 Economic Evaluation Procedures of Hydro One's Transmission Connection Procedures.

For the Line pool, the Discounted Cash Flow ("DCF") results show that this capacity enhancement project will have a negative net present value of $23.4 million and will require a capital contribution of $27.7 million from the Customer. This DCF analysis is based on the incremental estimated initial cost of $31.7 million (refer to Section 2.0,

Cost Responsibility below), plus the assumed impact on the future capital cost allowance and Hydro One corporate income tax. There is no material incremental operating and maintenance expenditures as a result of the proposed Project. OM&A expenditures that are required today to maintain the existing Line Connection facilities are not expected to be incrementally impacted going forward to maintain the upgraded reconductored line. The residual $4.0M expenditures would be rate-based and fully recovered via new Line Connection revenues collected from the Customer, resulting from the new incremental load. Details can be seen in **Table 1** below.

For the Network pool, the DCF results show that this capacity enhancement project will have a positive net present value of $13.1 million and will not require a capital contribution from the Customer. This DCF analysis is based on the incremental estimated initial cost of $2.7 million, plus the assumed impact on the future capital cost allowance and Hydro One corporate income tax, and incremental operating and maintenance expenditures required to maintain the new station assets. All capital expenditures would be rated-based and fully recovered via the incremental Network revenues collected from the Customer, resulting from the new incremental load. Details can be seen on **Table 2** below.

2.0 COST RESPONSIBILITY

Network Pool

The new 115kV station facilities which are required to be installed will be classified as Network Connection Assets. These assets resulting from the Iamgold Cote Lake mine project will provide high voltage switching capabilities for the energized T2R circuit. The T2R circuit (from Timmins TS x Shiningtree JCT) will be owned and operated by Hydro One and thus can provide a connection point for future network assets and or loads. As such, these station facilities can perform network functions, and for that reason they are

proposed to be classified as Network assets. The total expected value of work to install these assets is approximately $2.74M.

Line Pool

The new 115kV transmission lines will continue to be classified as Line Connection Assets. T2R and T61S circuits are both operated as radial lines from Timmins TS. These assets have one supply source with multiple end use customers. The intended use of these circuits will not be changed following the completion of the Project, and for that reason they are proposed to be classified as Line assets. The total expected value of these proposed line assets is approximately $69.08[1]M, with the following cost split: $31.72M for Iamgold and $37.36M for Hydro One.

Analysis was completed to determine whether the Customer should be cost-accountable for the advancement of the end of life replacement of the 115 kv circuit T61S ($37.36M portion allocated to Hydro One) from the planned 2024 in-service date to 2021. It was determined that the efficiencies created in executing the work in conjunction with the T2R reconductoring, such as outage management (not requiring to install temporary generation or a bypass), access road construction, removals and work crew mobilization only being complete for one project instead of two outweighed the impact of advancing the Project from a time value of money perspective. Therefore, it was determined that it would benefit the ratepayers to advance the work to realize efficiencies with the Customer Project.

Further analysis was completed to determine whether the current deficiencies with the T61S transmission facilities would impede completing construction of T2R (i.e. remediation of currently deficient footings) in 2020 with the actual reconductoring of T61S completed in 2024. The analysis showed that inefficiencies created from splitting

[1] This does not include the currently estimate value of $146K in removals

the work execution into two projects (one in 2020, the other in 2024) would cancel the benefits to ratepayers caused by the time value of money effect of delaying a portion of expenditures to 2024.

From a financial perspective, ratepayers benefit from combining the T2R and the T61S projects. Ratepayers will also benefit from enhanced reliability and quality of service by having the two conductors energized, although this benefit has not been quantified and had no impact on the determination of whether the Customer should be cost accountable for the advancement. Therefore, based solely on financial benefits, the Customer was not assigned any cost responsibility for the advancement of the replacement of end-of-life equipment of T61S.

Project Cost Responsibility and Capital Contribution

	Incremental Cost of Work (per B-7-1)	Cost Responsibility		Capital Contribution
		Customer	Pool	
Transmission Line Facilities	69.1	31.7	37.4	27.7
Station Facilities	2.7	2.7	-	-
Total	71.8	34.4	37.4	27.7

3.0 RATE IMPACT ASSESSMENT

The analysis of the Network and Line Connection pool rate impacts has been carried out on the basis of Hydro One's transmission revenue requirement for the year 2018 and the most recently-approved Ontario Transmission Rate Schedules.

Line Pool

Based on the Project's initial Line pool cost of $69.1 million, including both the mine connection as well as the end-of-life replacement of T61S, and the associated

incremental cash flows, there will be a 1.05% increase in the Line Connection pool required revenue requirement once the Project's impacts are reflected in the transmission rate base at the projected in-service date, June 2021. Over a 10-year time horizon, this change in the Line Connection pool revenue requirement will increase Provincial Line rates by $0.01 from the current rate of $0.95/kW/month to $0.96/kW/month. The maximum revenue shortfall related to the proposed Line Connection Pool facilities will be $2.6 million in the year 2028. Note, the increase in the Line Connection pool is driven solely by the end-of-life replacement component of the T61S circuit Project, not by the connection requested by the Customer. A detailed analysis illustrating the calculation of the incremental line connection revenue shortfall and rate impact is provided in Table 3 below.

Network Pool

Based on the project's initial cost of $2.7 million and the associated network pool incremental cash flows, there will be a slight decrease of 0.28% in the network pool rates once the Project's impacts are reflected in the transmission rate base and the incremental revenues at the projected in-service date, June 2021. Over a 10-year time horizon, this minor change in the network pool revenue requirement would decrease the rate by $0.01, from $3.61/kW/month to $3.60/kW/month. The maximum revenue surplus related to the proposed network facilities will be $2.81 million in the year 2025. The detailed analysis illustrating the calculation of the incremental network revenue shortfall and rate impact is provided in Table 4 below.

Impact on Typical Residential Customer

Based on the load forecast, initial capital costs and ongoing maintenance costs, the majority of the incremental increase on the Line Connection pool is cancelled out by the decrease in the Network pool network pool. The result is an immaterial impact to overall rates and is forecast to cause no change in a typical residential customer's rates under the Regulated Price Plan (RPP).

Table 1: Net Present Value Analysis of Line Connection Pool, page 1 of 1

Date: 25-Aug-18
Project #

SUMMARY OF CONTRIBUTION CALCULATIONS
Line Pool - Estimated cost

Facility Name: Côté Lake Mine
Description: Reconductoring and energizing T2R
Customer: IAMGOLD

			In-Service Date	<------- Project year ended - annualized from In-Service Date ------->										
		Month	Jun-1	Jun-1	Jun-1	Jun-1	Jun-1	Jun-1	Jun-1	Jun-1	Jun-1	Jun-1	Jun-1	Jun-1
		Year	2021	2022	2023	2024	2025	2026	2027	2028	2029	2030	2031
			0	1	2	3	4	5	6	7	8	9	10
Revenue & Expense Forecast														
Load Forecast (MW)				29.8	60.1	65.9	70.0	70.0	70.0	70.0	70.0	70.0	70.0
Load adjustments (MW)				0.0	0.0	0.0	0.0	0.0	0.0	0.0	0.0	0.0	0.0
				29.8	60.1	65.9	70.0	70.0	70.0	70.0	70.0	70.0	70.0
Tariff Applied ($/kW/Month)				0.95	0.95	0.95	0.95	0.95	0.95	0.95	0.95	0.95	0.95
Incremental Revenue - $M				0.3	0.7	0.7	0.8	0.8	0.8	0.8	0.8	0.8	0.8
Removal Costs - $M			0.0										
On-going OM&A Costs - $M			0.0	0.0	0.0	0.0	0.0	0.0	0.0	0.0	0.0	0.0	0.0
Municipal Tax - $M				(0.1)	(0.1)	(0.1)	(0.1)	(0.1)	(0.1)	(0.1)	(0.1)	(0.1)	(0.1)
Net Revenue/(Costs) before taxes - $M			0.0	0.2	0.6	0.6	0.7	0.7	0.7	0.7	0.7	0.7	0.7
Income Taxes			0.0	0.3	0.5	0.4	0.4	0.3	0.3	0.2	0.2	0.2	0.2
Operating Cash Flow (after taxes) - $M			0.0	0.5	1.1	1.1	1.0	1.0	1.0	0.9	0.9	0.9	0.8
		Cumulative PV @ 5.59%											
PV Operating Cash Flow (after taxes) - $M	**(A)**	**7.0**	**0.0**	**0.5**	**1.0**	**0.9**	**0.9**	**0.8**	**0.7**	**0.6**	**0.6**	**0.5**	**0.5**
Capital Expenditures - $M													
Upfront - capital cost before overheads & AFUDC			(31.7)										
- Overheads			0.0										
- AFUDC			0.0										
Total upfront capital expenditures			**(31.7)**										
On-going capital expenditures				0.0	0.0	0.0	0.0	0.0	0.0	0.0	0.0	0.0	0.0
PV On-going capital expenditures			0.0										
Total capital expenditures - $M			**(31.7)**										
Capital Expenditures - $M													
PV CCA Residual Tax Shield - $M			**1.3**										
PV Working Capital - $M			**0.0**										
PV Capital (after taxes) - $M	**(B)**	**(30.4)**	**(30.4)**										
Cumulative PV Cash Flow (after taxes) - $M	**(A) + (B)**	**(23.4)**	**(30.4)**	**(29.9)**	**(29.0)**	**(28.0)**	**(27.2)**	**(26.4)**	**(25.7)**	**(25.0)**	**(24.5)**	**(23.9)**	**(23.4)**

Discounted Cash Flow Summary

Economic Study Horizon - Years: **10**

Discount Rate - % **5.59%**

		Before Cont $M		**After Cont** $M	**Impact** $M
PV Incremental Revenue		5.5		5.5	
PV OM&A Costs		0.0		0.0	
PV Municipal Tax		(0.9)		(0.9)	
PV Income Taxes		(1.2)		(1.2)	(0.0)
PV CCA Tax Shield		4.9		0.6	(4.3)
PV Capital - Upfront	(31.7)		(31.7)		
Add: PV **Capital Contribution**	**0.0**	(31.7)	**27.7**	(4.0)	27.7
PV Capital - On-going		0.0		0.0	
PV Working Capital		0.0		0.0	
PV Surplus / (Shortfall)		**(23.4)**		**(0.0)**	**23.4**
Profitability Index*		**0.3**		**1.0**	

Notes:
*PV of total cash flow, excluding net capital expenditure & on-going capital & proceeds on disposal / PV of net capital expenditure & on-going capital & proceeds on disposal

Other Assumptions

In-Service Date: 1-Jun-21

Payback Year: 2031

No. of years required for payback: 10

1 **Table 2: Net Present Value Analysis of Network Pool, page 1 of 1**

Date: 25-Aug-18
Project #

SUMMARY OF CONTRIBUTION CALCULATIONS
Network Pool - Estimated cost

Facility Name: Côté Lake Mine
Description: Reconductoring and energizing T2R
Customer: IAMGOLD

			In-Service Date	<------- Project year ended - annualized from In-Service Date ------->										
		Month	Jun-1	Jun-1	Jun-1	Jun-1	Jun-1	Jun-1	Jun-1	Jun-1	Jun-1	Jun-1	Jun-1	Jun-1
		Year	**2021**	**2022**	**2023**	**2024**	**2025**	**2026**	**2027**	**2028**	**2029**	**2030**	**2031**
			0	*1*	*2*	*3*	*4*	*5*	*6*	*7*	*8*	*9*	*10*
Revenue & Expense Forecast													
Load Forecast (MW)				29.8	60.1	65.9	70.0	70.0	70.0	70.0	70.0	70.0	70.0
Load adjustments (MW)				0.0	0.0	0.0	0.0	0.0	0.0	0.0	0.0	0.0	0.0
				29.8	60.1	65.9	70.0	70.0	70.0	70.0	70.0	70.0	70.0
Tariff Applied ($/kW/Month)				3.61	3.61	3.61	3.61	3.61	3.61	3.61	3.61	3.61	3.61
Incremental Revenue - $M				1.3	2.6	2.9	3.0	3.0	3.0	3.0	3.0	3.0	3.0
Removal Costs - $M			0.0										
On-going OM&A Costs - $M			0.0	(0.0)	(0.0)	(0.0)	(0.0)	(0.0)	(0.0)	(0.0)	(0.0)	(0.0)	(0.0)
Municipal Tax - $M				(0.0)	(0.0)	(0.0)	(0.0)	(0.0)	(0.0)	(0.0)	(0.0)	(0.0)	(0.0)
Net Revenue/(Costs) before taxes - $M			0.0	1.3	2.6	2.8	3.0	3.0	3.0	3.0	3.0	3.0	3.0
Income Taxes			0.0	(0.3)	(0.6)	(0.7)	(0.8)	(0.8)	(0.8)	(0.8)	(0.8)	(0.8)	(0.8)
Operating Cash Flow (after taxes) - $M			0.0	1.0	2.0	2.1	2.3	2.3	2.2	2.2	2.2	2.2	2.2
		Cumulative PV @ 5.59%											
PV Operating Cash Flow (after taxes) - $M	**(A)**	**15.7**	**0.0**	**0.9**	**1.8**	**1.9**	**1.9**	**1.8**	**1.7**	**1.6**	**1.5**	**1.4**	**1.3**
Capital Expenditures - $M													
Upfront - capital cost before overheads & AFUDC			(2.7)										
- Overheads			0.0										
- AFUDC			0.0										
Total upfront capital expenditures			**(2.7)**										
On-going capital expenditures				0.0	0.0	0.0	0.0	0.0	0.0	0.0	0.0	0.0	0.0
PV On-going capital expenditures			0.0										
Total capital expenditures - $M			**(2.7)**										
Capital Expenditures - $M													
PV CCA Residual Tax Shield - $M			**0.1**										
PV Working Capital - $M			**(0.0)**										
PV Capital (after taxes) - $M	**(B)**	**(2.6)**	**(2.6)**										
Cumulative PV Cash Flow (after taxes) - $M	**(A) + (B)**	**13.1**	**(2.6)**	**(1.7)**	**0.1**	**2.0**	**3.8**	**5.6**	**7.3**	**8.8**	**10.3**	**11.7**	**13.1**

Discounted Cash Flow Summary

Economic Study Horizon - Years: **10**

Discount Rate - % **5.59%**

		Before Cont $M
PV Incremental Revenue		21.1
PV OM&A Costs		(0.1)
PV Municipal Tax		(0.1)
PV Income Taxes		(5.5)
PV CCA Tax Shield		0.4
PV Capital - Upfront	(2.7)	
Add: PV **Capital Contribution**	**0.0**	(2.7)
PV Capital - On-going		0.0
PV Working Capital		(0.0)
PV Surplus / (Shortfall)		**13.1**
Profitability Index*		**5.8**

Notes:
*PV of total cash flow, excluding net capital expenditure & on-going capital & proceeds on disposal / PV of net capital expenditure & on-going capital & proceeds on disposal

Other Assumptions

In-Service Date:	1-Jun-21
Payback Year:	2023
No. of years required for payback:	2

2

Table 3: Revenue Requirement and Line Connection Pool Rate Impact, page 1 of 1

Revenue Requirement and Line Pool Rate Impact **(After Capital Contribution)**

Côté Lake Mine		Project YE 15-Jun 2022	15-Jun 2023	15-Jun 2024	15-Jun 2025	15-Jun 2026	15-Jun 2027	15-Jun 2028	15-Jun 2029	15-Jun 2030	15-Jun 2031
Calculation of Incremental Revenue Requirement ($ millions)		1	2	3	4	5	6	7	8	9	10
In-service date	15-Jun-21										
Capital Cost	69.1										
Less: Capital Contribution Required	(27.7)										
Net Project Capital Cost	41.4										
Average Rate Base		20.3	40.1	39.3	38.5	37.6	36.8	36.0	35.2	34.3	33.5
Incremental OM&A Costs		0.0	0.0	0.0	0.0	0.0	0.0	0.0	0.0	0.0	0.0
Grants in Lieu of Municipal tax		0.3	0.3	0.3	0.3	0.3	0.3	0.3	0.3	0.3	0.3
Depreciation		0.8	0.8	0.8	0.8	0.8	0.8	0.8	0.8	0.8	0.8
Interest and Return on Rate Base		1.3	2.5	2.5	2.4	2.4	2.3	2.3	2.2	2.2	2.1
Income Tax Provision		(0.0)	(0.3)	(0.2)	(0.2)	(0.1)	(0.0)	0.0	0.1	0.1	0.1
REVENUE REQUIREMENT PRE-TAX		**2.3**	**3.3**	**3.3**	**3.3**	**3.4**	**3.4**	**3.4**	**3.4**	**3.4**	**3.3**
Incremental Revenue		0.4	0.7	0.8	0.8	0.8	0.8	0.8	0.8	0.8	0.8
SUFFICIENCY/(DEFICIENCY)		**(1.9)**	**(2.6)**	**(2.6)**	**(2.6)**	**(2.6)**	**(2.6)**	**(2.6)**	**(2.6)**	**(2.6)**	**(2.6)**
	Base Year										
Line Pool Revenue Requirement including sufficiency/(deficiency)	227	230	231	231	231	231	231	231	231	231	231
Line MW	240	241	241	241	241	241	241	241	241	241	241
Line Pool Rate ($/kw/month)	0.95	0.95	0.96	0.96	0.96	0.96	0.96	0.96	0.96	0.96	0.96
Increase/(Decrease) in Line Pool Rate ($/kw/month), relative to base year		0.00	0.01	0.01	0.01	0.01	0.01	0.01	0.01	0.01	0.01
RATE IMPACT relative to base year		**0.00%**	**1.05%**	**1.05%**	**1.05%**	**1.05%**	**1.05%**	**1.05%**	**1.05%**	**1.05%**	**1.05%**

Assumptions

Incremental OM&A		Reconductoring - immaterial
Grants in Lieu of Municipal tax	0.38%	Transmission system average
Depreciation	2.00%	Reflects 50 year average service life for towers, conductors and station equipment, excluding land
Interest and Return on Rate Base	6.31%	Includes OEB-approved ROE of 9%, 2.29% on ST debt, and 4.68% on LT debt. 40/4/56 equity/ST debt/ LT debt split
Income Tax Provision	26.50%	2018 federal and provincial corporate income tax rate
Capital Cost Allowance	8.00%	100% Class 47 assets

Table 4: Revenue Requirement and Network Pool Rate Impact, page 1 of 1

Revenue Requirement and Network Pool Rate Impact **(After Capital Contribution)**

Côté Lake Mine		Project YE 1-Jun 2022	1-Jun 2023	1-Jun 2024	1-Jun 2025	1-Jun 2026	1-Jun 2027	1-Jun 2028	1-Jun 2029	1-Jun 2030	1-Jun 2031
Calculation of Incremental Revenue Requirement ($ millions)		1	2	3	4	5	6	7	8	9	10
In-service date	1-Jun-21										
Capital Cost	2.7										
Less: Capital Contribution Required	-										
Net Project Capital Cost	2.7										
Average Rate Base		1.3	2.7	2.6	2.5	2.5	2.4	2.4	2.3	2.3	2.2
Incremental OM&A Costs		0.0	0.0	0.0	0.0	0.0	0.0	0.0	0.0	0.0	0.0
Grants in Lieu of Municipal tax		0.0	0.0	0.0	0.0	0.0	0.0	0.0	0.0	0.0	0.0
Depreciation		0.1	0.1	0.1	0.1	0.1	0.1	0.1	0.1	0.1	0.1
Interest and Return on Rate Base		0.1	0.2	0.2	0.2	0.2	0.2	0.2	0.1	0.1	0.1
Income Tax Provision		(0.0)	(0.0)	(0.0)	(0.0)	(0.0)	(0.0)	0.0	0.0	0.0	0.0
REVENUE REQUIREMENT PRE-TAX		**0.2**	**0.2**	**0.2**	**0.2**	**0.2**	**0.2**	**0.2**	**0.2**	**0.2**	**0.2**
Incremental Revenue		1.3	2.6	2.9	3.0	3.0	3.0	3.0	3.0	3.0	3.0
SUFFICIENCY/(DEFICIENCY)		**1.1**	**2.4**	**2.6**	**2.8**	**2.8**	**2.8**	**2.8**	**2.8**	**2.8**	**2.8**
	Base Year										
Network Pool Revenue Requirement including sufficiency/(deficiency)	899	899	900	900	900	900	900	900	900	900	900
Network MW	249	250	250	250	250	250	250	250	250	250	250
Network Pool Rate ($/kw/month)	3.61	3.60	3.60	3.60	3.60	3.60	3.60	3.60	3.60	3.60	3.60
Increase/(Decrease) in Network Pool Rate ($/kw/month), relative to base year		(0.01)	(0.01)	(0.01)	(0.01)	(0.01)	(0.01)	(0.01)	(0.01)	(0.01)	(0.01)
RATE IMPACT relative to base year		**-0.28%**	**-0.28%**	**-0.28%**	**-0.28%**	**-0.28%**	**-0.28%**	**-0.28%**	**-0.28%**	**-0.28%**	**-0.28%**

Assumptions

Incremental OM&A		Years 1 to 5 0.43% of Initial Capital each year; Years 6 to 15 0.86% of Initial Captial each year; Years 16 to 25 1.07% of Initial Capital each year.
Grants in Lieu of Municipal tax	0.38%	Transmission system average
Depreciation	2.00%	Reflects 50 year average service life for towers, conductors and station equipment, excluding land
Interest and Return on Rate Base	6.31%	Includes OEB-approved ROE of 9%, 2.29% on ST debt, and 4.68% on LT debt. 40/4/56 equity/ST debt/ LT debt split
Income Tax Provision	26.50%	2018 federal and provincial corporate income tax rate
Capital Cost Allowance	8.00%	100% Class 47 assets

1 **Table 5: DCF Assumptions, page 1 of 1**

Hydro One Networks -- Transmission Connection Economic Evaluation Model
2018 Parameters and Assumptions

Transmission rates are based on current OEB-approved uniform provincial transmission rates.

	Monthly Rate ($ per kW)
Network	**3.61**
Transformation	**2.34**
Line	**0.95**

Grants in lieu of Municipal tax (% of up-front capital expenditure, a proxy for property value):		**0.38%**	Based on Transmission system average
Income taxes:			
Basic Federal Tax Rate - % of taxable income:	2018	**15.00%**	Current rate
Ontario corporation income tax - % of taxable income:	2018	**11.50%**	Current rate
Capital Cost Allowance Rate:			
Class 47 costs	2018	**8%**	Current rate
Decision Support defined costs (1)	2018	**0%**	
Decision Support defined costs (2)	2018	**0%**	
Decision Support defined costs (3)	2018	**0%**	
After-tax Discount rate:		**5.59%**	Based on OEB-approved ROE of 9% on common equity and 2.29% on short-term debt, 4.68% forecast cost of long-term debt and 40/60 equity/debt split, and current enacted income tax rate of 26.5%

Other Assumptions:

Estimated Incremental OM&A: Project specific ($ k):

Network Station	**1.0%**	of up-front capital expenditure each year for years 1 - 5
	2.0%	of up-front capital expenditure each year for years 6 - 15
	2.4%	of up-front capital expenditure each year for years 16 - 25

Deferral Account Requests

There are no new deferral account requests being made as part of this Application.

Project Schedule

TASK	START	FINISH
Leave to Construct Hearing[1]	Aug 30, 2018	Mar 2019
Detailed Engineering	Sep 2018	May 2019
Procurement[2]	Mar 2019	Aug 2019
Receive Material	Sep 2019	Nov 2019
Hydro One Board approval and CCRA execution	May 2019	Aug 2019
Real Estate	Feb 2019	Sep 2019
Construction	Sep 2019	Jun 2021
In-Service Circuit T2R		Aug 2020
In-Service Timmins TS		Aug 2020
In-service Circuit T61S		Jun 2021
Commissioning [3]	Aug 2020	Jun 2021

Notes :

[1] Hydro One has been informed that the Customer would prefer that all necessary approvals to complete the Project be in-hand by December, 2018. The proposed schedule is in line with recent Board decision timelines regarding leave to construct applications, but Hydro One requests that the Board work towards its performance standard of processing written hearing applications within 130 days. Hydro One is amenable to assisting the Board in any commercially reasonable way to achieve this outcome for the Customer.

[2] From a Hydro One construction execution perspective, Hydro One requires Board approval no later than March 2019, prior to the commencement of procurement activities, to avoid potential stranding of assets on increased unused inventory. These activities must commence by March to ensure that long-lead time items are secured before a September 2019 construction start date. A pre-CCRA is being considered to secure funding from the Customer for the necessary material required for starting construction in September 2019.

[3] Commissioning activities will be coordinated with the Customer during the execution phase of the project for T2R and Timmins TS work. T61S commissioning will commence after that work has been put in-service.

Descriptions of the Physical Design

1.0 LINE FACILITIES

To facilitate the connection of the Customer to Hydro One's 115kV T2R line, Hydro One will need to rebuild to like-new conditions and energize the idle T2R with all necessary line components as required from Timmins TS to Shiningtree JCT. The connection will require a new station termination in the 115kV yard at Timmins TS to accommodate the new T2R circuit. In concert with this connection work, Hydro One will also refurbish the T61S circuit and bring that line to like-new conditions.

T2R/T61S Line work

As part of the Iamgold connection project, the existing 336.4kcmil steel reinforced aluminum conductor ("ACSR") on circuit T2R will be replaced with 411.1 kcmil ACSR conductor to handle the higher anticipated customer load.

The existing 115 kV T2R circuit between Timmins TS and Shiningtree JCT consists of approximately 345 towers. It is situated on a double circuit tower line, shared with the existing 115 kV circuit T61S, and was constructed in the 1930s and 1940s. The line has many aged and obsolete line components. With the exception of one wood structure located west of Sunset Blvd and Pine Street S. in Timmins, Ontario, both circuits from Timmins TS to Shiningtree JCT are situated on 2-cct lattice towers that are mainly Abitibi (ST5-011) type. A design of this tower type is provided below as Figure 1.

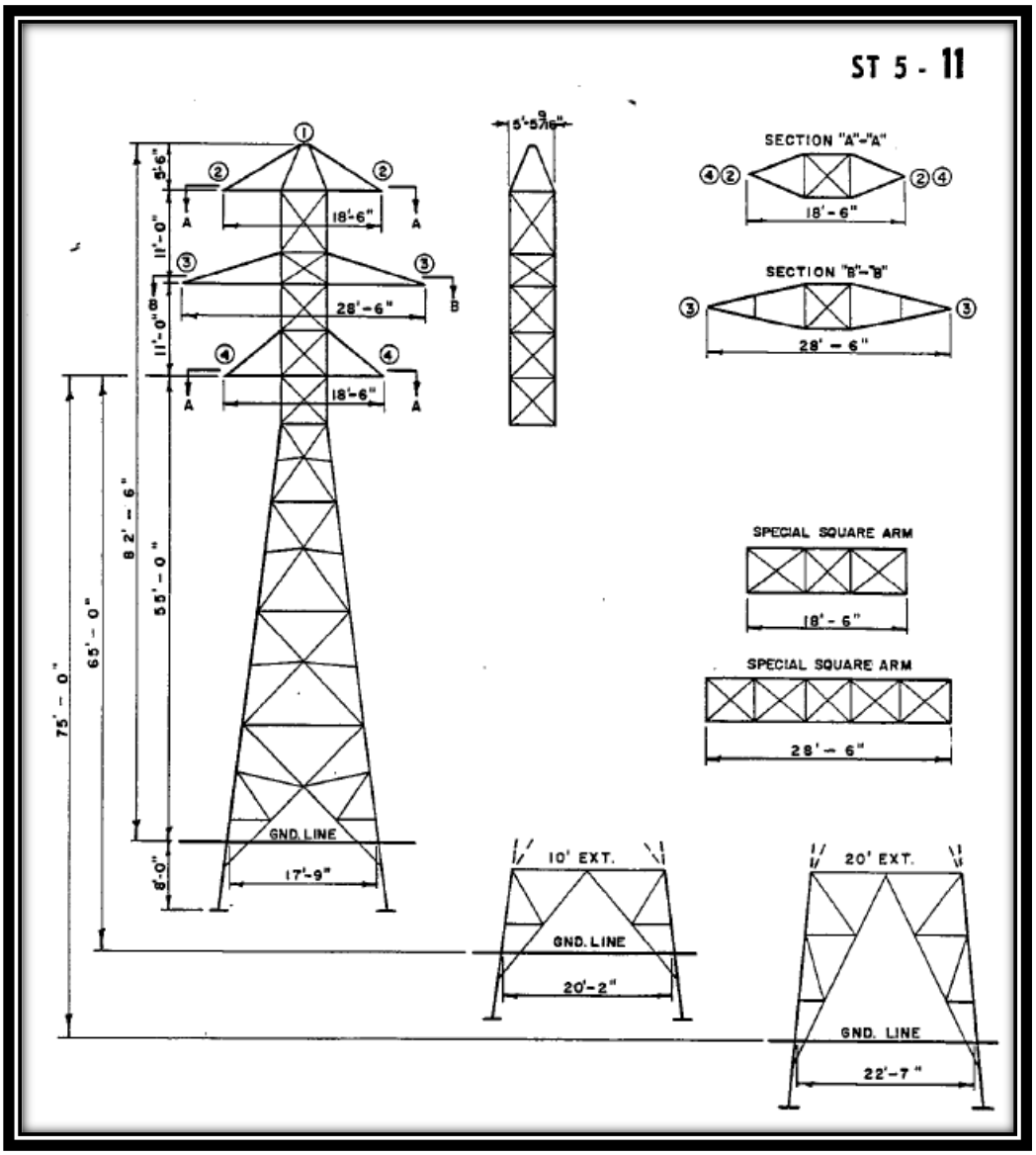

Figure 1: Typical Abitibi ST5-11 Type Suspension Tower Configuration

To meet the need of the Customer connection, the T2R line will be refurbished to like-new condition including tower refurbishment/ reinforcement, replacing existing conductors with 411.1 kcmil ACSR conductor, insulators, and other associated hardware as necessary.

The T61S circuit conductor will also be replaced with 411.1 kcmil ACSR, as 411 kcmil ACSR is the minimum conductor size installed by Hydro One on its 115 kV overhead lines.

In summary, Hydro One is seeking OEB Leave-to-Construct approval for the following line work:

- Upgrade 115km of circuit T2R between Timmins TS and Shiningtree JCT with 411.1kcmil ACSR
- Replace all hangers on the towers
- Replace all insulators and conductor hardware that will need to be replaced
- Install longer middle arms on approximately 183 towers such that both middle and bottom phase conductors are all strung to the middle arm as per Figure 2
- Install an additional tower body shaft extension on approximately five existing steel structures to increase the elevation of the point of attachment as per Figure 3
- Install in-line switches on T61S and T2R and circuit tie switches at towers near Sunset Blvd, between strands 293 and 294, and North of the Iamgold line tap point
- Install a new G1H dead-end steel tower, Line Span Opener steel tower, and three composite poles approximately 50m north of Shiningtree JCT to connect to the T2R circuit to the Iamgold customer
- Install new counterpoise wire (#4 copperclad) if found damaged in the line section
- Install access roads to the transmission corridor as required
- To refurbish and reinforce the remainder of the towers affected by excessive rust or damage with minor modifications as required

- Replace the existing double circuit wood pole H-frame structures at Sunset Blvd. with a new dead end G1H steel structure.

In addition, if approved, the project will replace existing skywire with new 7#8 AW skywire for the first 10 spans (from Tower # 291 to Tower #300) from Timmins TS.

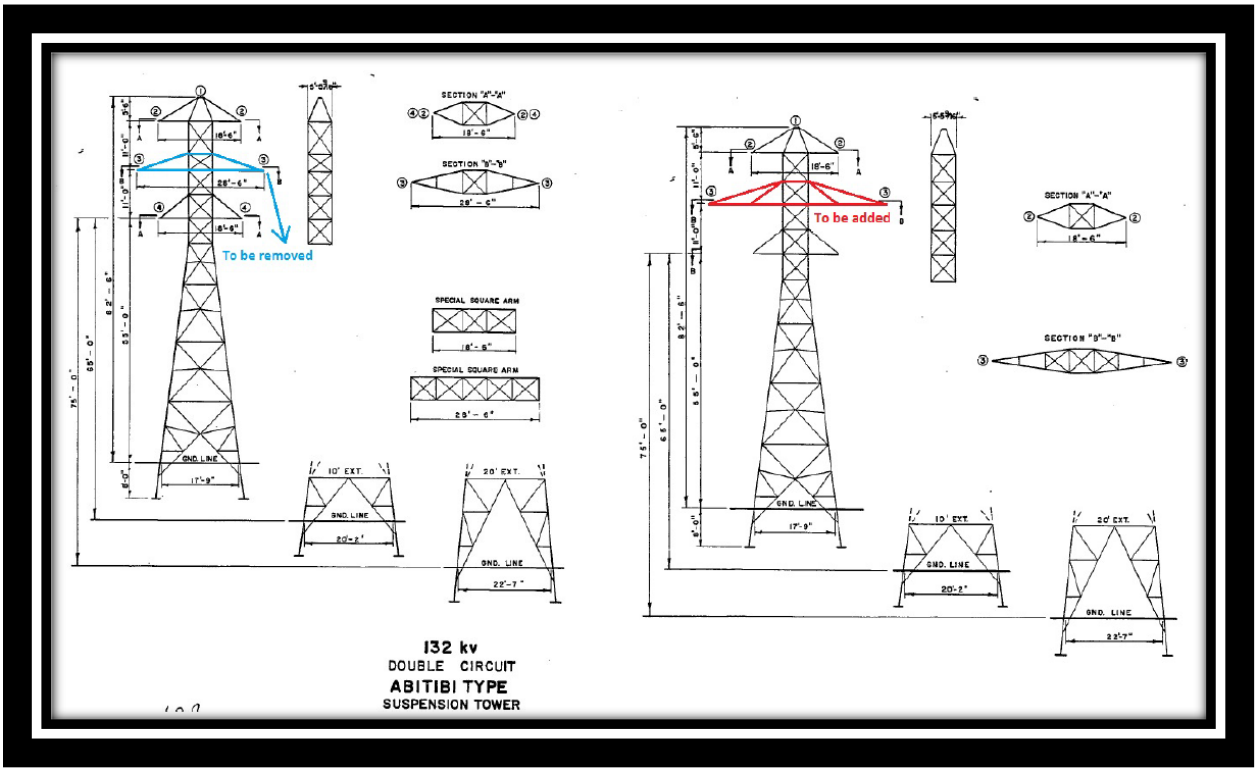

Figure 2 - Typical Abitibi Type Suspension Tower Configuration with Upgraded Longer Middle Cross Arm

(Designed to carry both the bottom and middle phase for increased line-to-ground clearance)

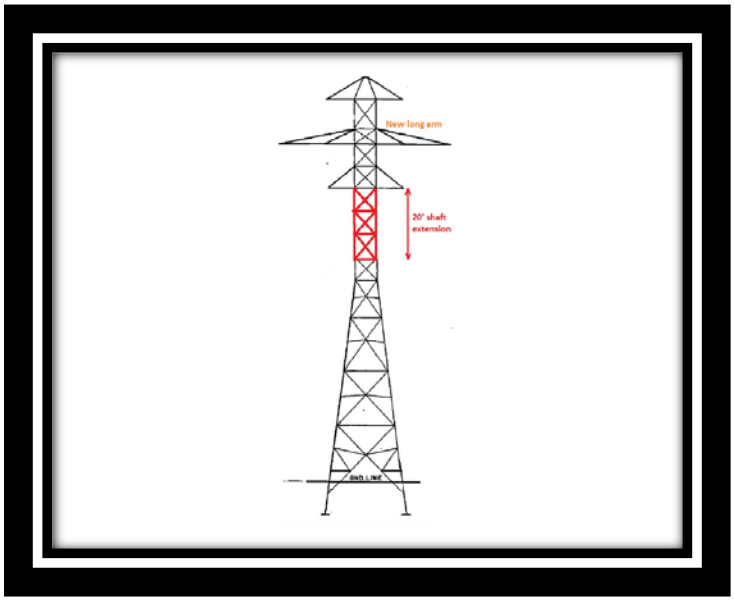

Figure 3 - Typical Abitibi Type Suspension Tower Configuration with 20 ft Tower Shaft Extension above Bent Line

The T61S line is a radial feed to Shiningtree DS. To avoid extensive outage durations on Shingingtree DS, the idle T2R line will be refurbished first so that T61S load can be transferred over to T2R. This will allow for T61S to be refurbished without major interruptions to load customers. The structure and foundation refurbishments, installation of line switches and shield-wire replacement will be staged between the T2R and T61S work with minimal outages.

The line tap connection to Iamgold is proposed to be installed as per the following tapping arrangement as seen in Figures 4 below:

- Installation of one G1H dead-end steel structure as seen in Figure 5 (below)
- Installation of one Line Span Opener steel structure west of the T61S line
- Installation of seven composite poles to string T2R from Tower 633B tapping conductors span from under the T2R and T61S line on to the Line Span Opener structure

- Installation of a gang operated disconnect switch at the Line Span Opener structure
- Installation of Line Mid-Span Openers on the T2R line on both sides of the disconnect switch.

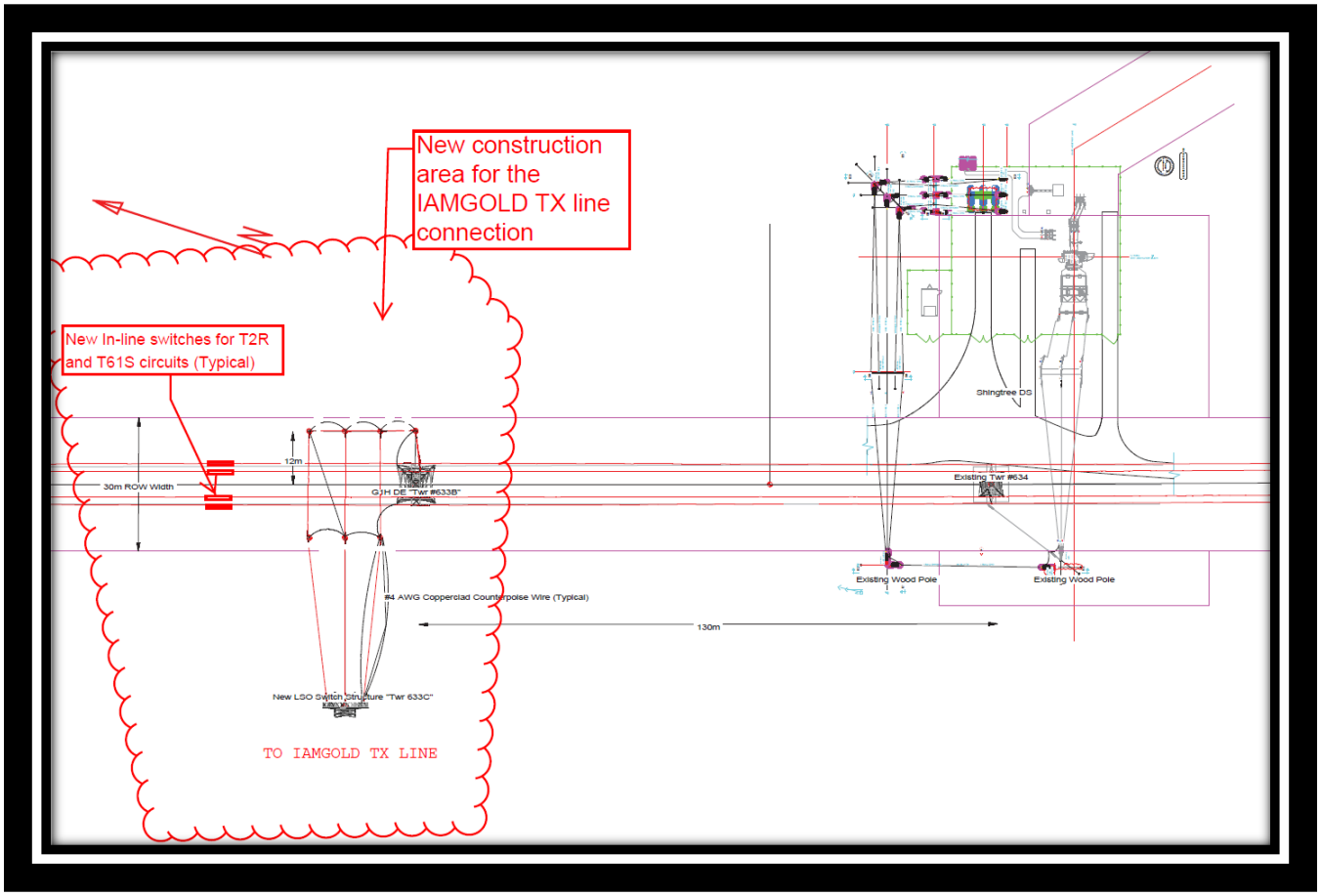

Figure 4: Proposed Electrical Arrangement at Iamgold Tapping Location

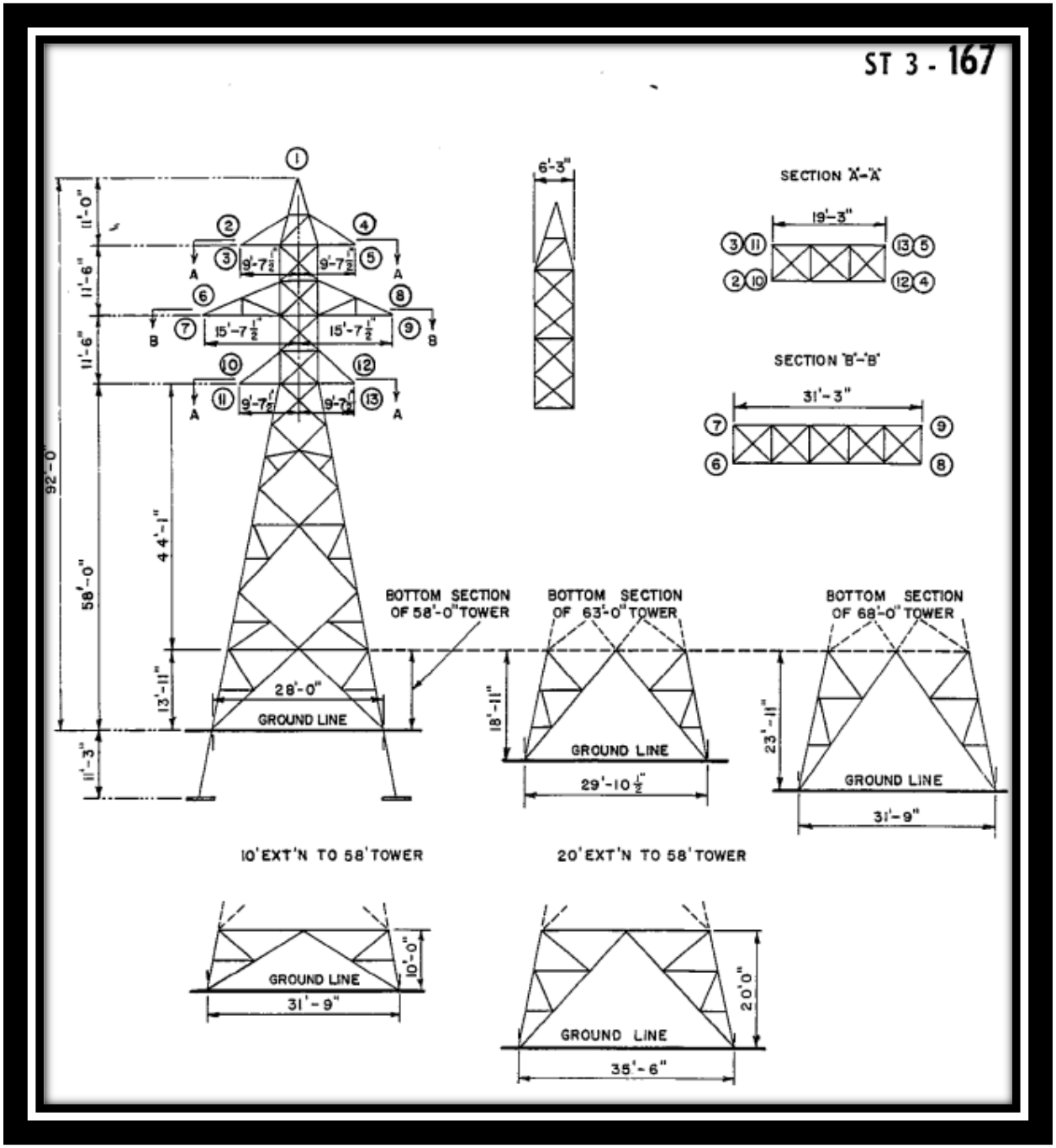

Figure 5: Typical G1H Structure Configuration

2.0 STATION FACILITIES

The connection of the Customer to the T2R circuit will require the following work at Timmins TS which will be performed in parallel to the line work and by staging construction and commissioning by optimizing outage bundling:

- Install one new 115kV circuit breaker
- Install two new 115kV circuit breaker isolating switches
- Install one new 115kV line grounding switch
- Install one new 115kV circuit breaker by-pass switch
- Install one new 115kV bus tie load interrupter switch (between 115kV bus K1 and K3)
- Install three new 115kV free standing current transformer at bus tie switch (between 115kV bus K1 and K3)
- Install 115kV bus work required for installation of bus tie switch,

As per the IESO's System Impact Assessment provided for Iamgold's new connection, Iamgold will be required to participate in the North East Load Rejection scheme which is presently located at Porcupine TS. Consequently, Cote Lake Mine is required to install new telecom/teleprotection facilities at Porcupine TS, and provide dual teleprotection for block and transfer trip communication signals between Hydro One stations (Porucpine TS / Timmins TS) and the Customer's station.

Maps and Schematic Diagrams

A map indicating the geographic location of the T2R/T61S circuit is provided as **Attachment 1** of this Schedule. This map should assist the Board in drafting the Notice of Hearing for this Application. Additionally, schematic diagrams depicting the existing and proposed facilities are provided as **Attachments 2 and 3** of this Schedule.

IAMGOLD 115 kV Connection Project - Timmins TS x Shining Tree JCT

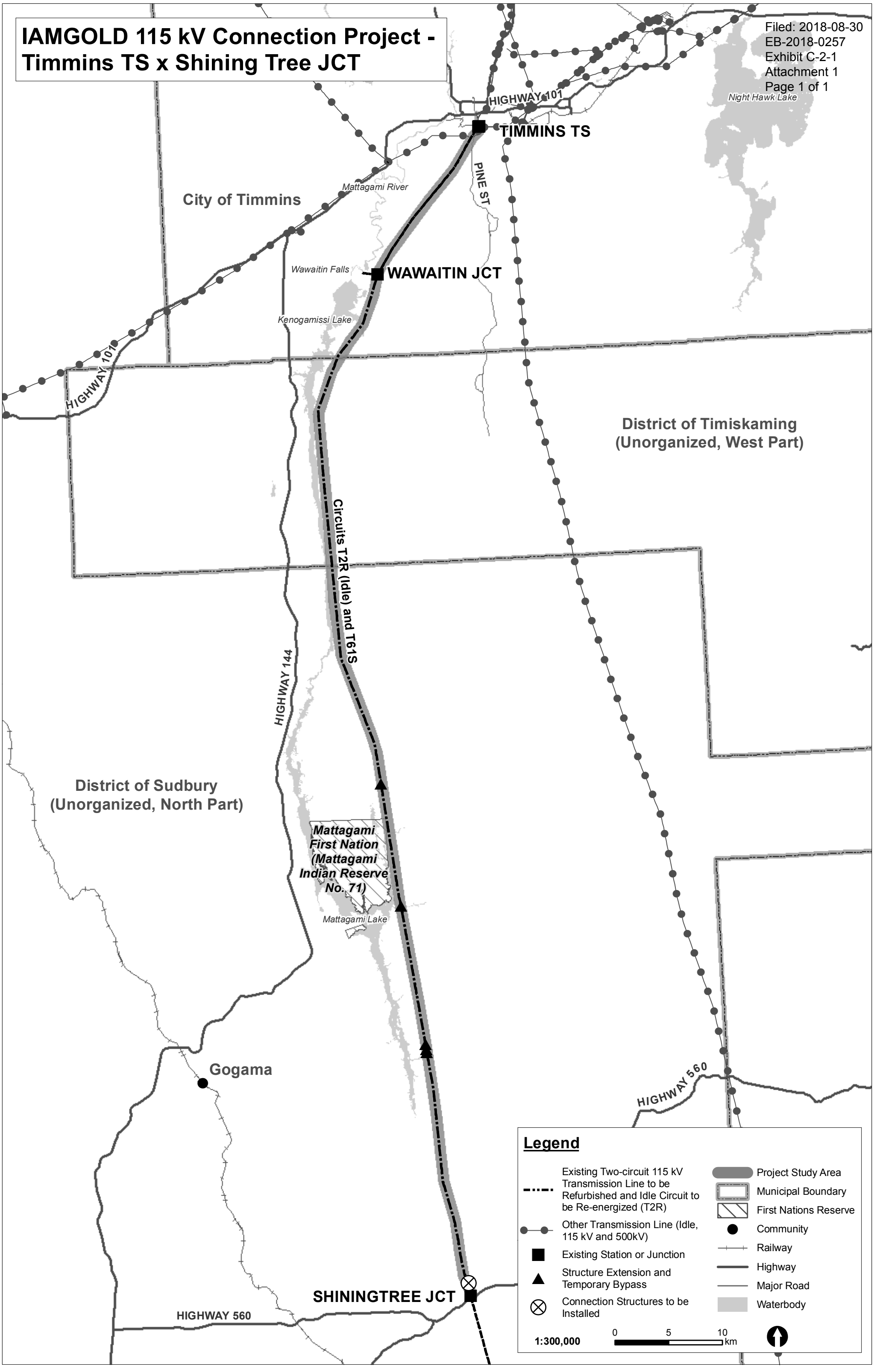

ATTACHMENT 2

Existing T2R/T61S Configuration

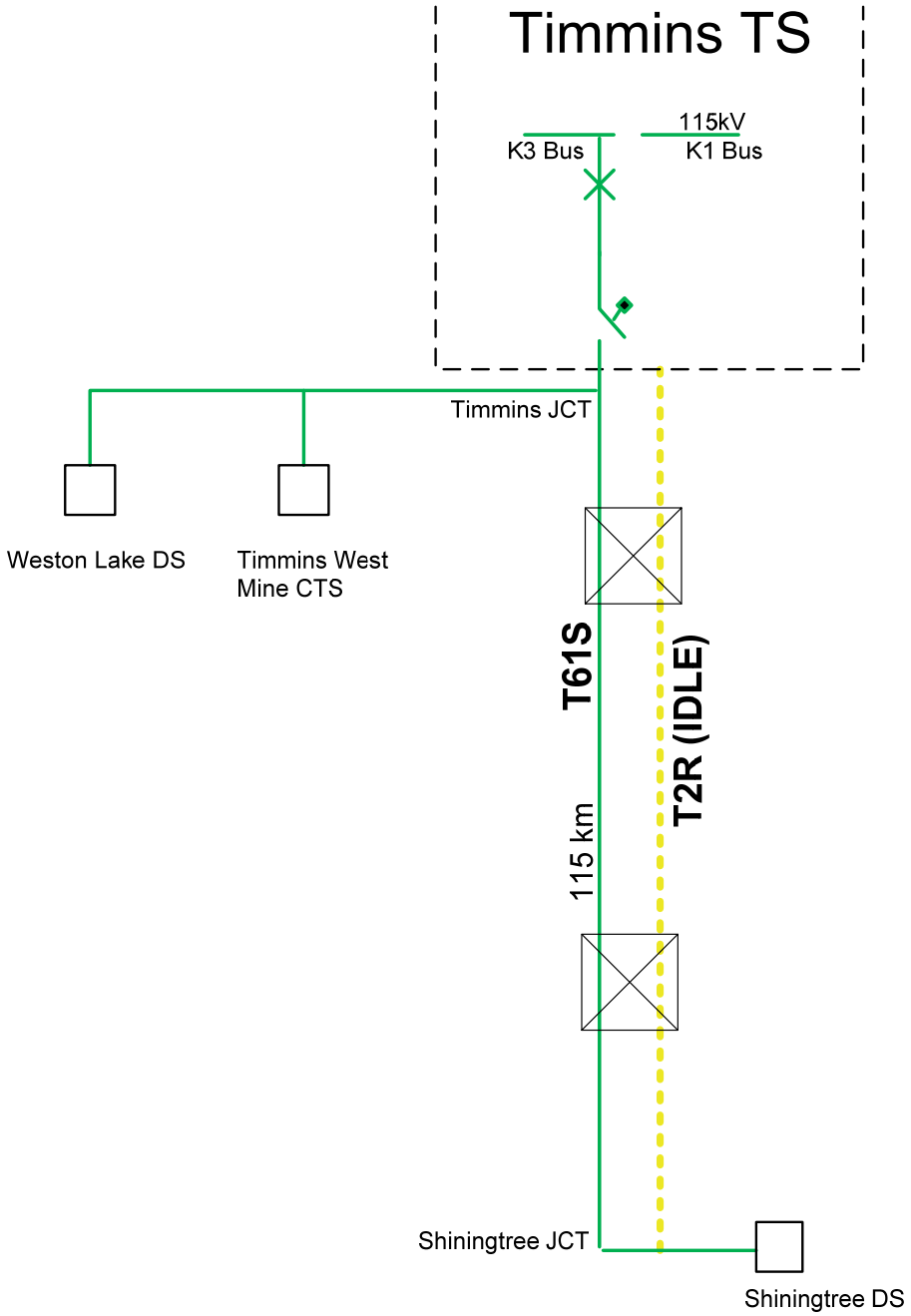

ATTACHMENT 3

Proposed connection of Cote Lake Mine and new Facilities

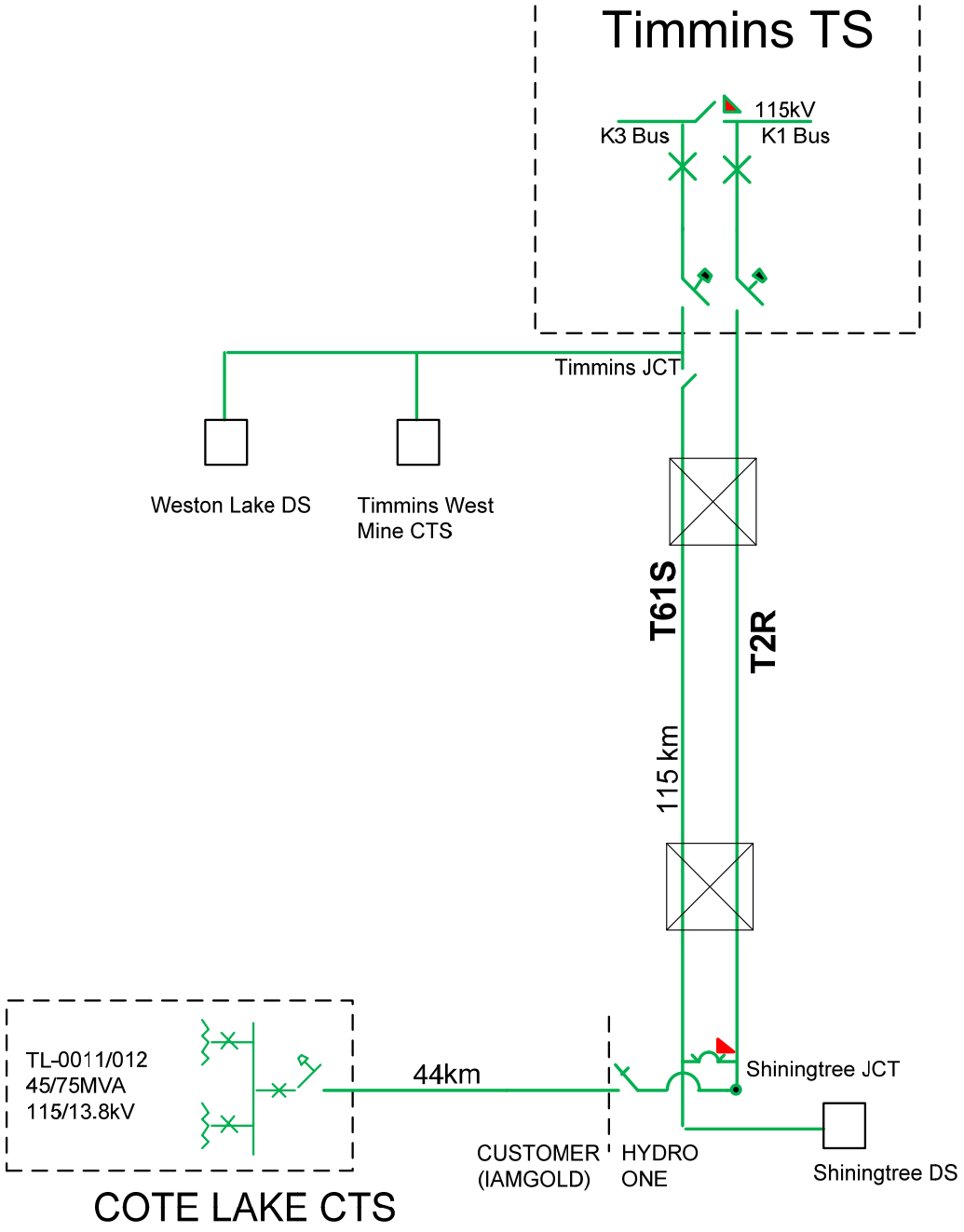

Operational Details

The Côté Lake Mine Project requires Hydro One to upgrade the existing 115 kV idle T2R transmission circuit (115km in length) with a new conductor of higher thermal capability. No portion of the circuits will be relocated or reconfigured. The status of the circuit will change from "idle" to "energized" after the Project is complete. The source station connecting T2R will be Timmins TS.

Following the completion of the work, the T2R circuit will supply the following customer:

- Iamgold – Côté Lake Mine CTS

The Project will also include the reconductoring of the existing 115kV T61S transmission circuit (115km) with new conductor of the same size as that proposed on the adjacent T2R circuit. No portion of the circuits will be relocated or reconfigured. The source station connecting T61S will remain Timmins TS.

Following the completion of the work, the T61S circuit will continue to supply the following customers:

- Hydro One Distribution – Shiningtree DS
- Hydro One Distribution – Weston Lake DS
- Lakeshore Gold Corp – Timmins West Mine CTS

New switches and/or Mid-Span Openers between circuits T61S and T2R, along various locations on the line, may be required during construction work on each of the circuits. However, normal operation of each circuit, after construction of the lines as described

above are completed, will remain isolated from each other and directly connected to the Timmins TS 115kV bus.

Land Matters

As referenced in the Application, the Iamgold Connection Project will involve refurbishment of the transmission line from Timmins TS to Shiningtree DS and re-energizing the idle T2R 115 kV circuit. The existing right-of-way width varies from 99 ft to 150 ft, providing sufficient width for the proposed line refurbishment work.

The Project will require additional right-of-way width for tapping structures, as identified in **Exhibit C, Tab 1, Schedule 1**. The connection will be on Ministry of Natural Resources and Forestry ("MNRF") crown land, and the additional width will be added to Hydro One's master Land Use Permit for Transmission.

The existing transmission corridor crosses an estimated 35 patented parcels of land, which consists of:

- Hydro One fee simple ownership;
- Easement corridor over privately-owned and municipally-owned properties;
- Lands under the jurisdiction of the MNRF;
- Crossings over Municipal roads and highways.

The existing Hydro One transmission corridor from Timmins TS to Shiningtree DS crosses 35 patented properties and crown land under the jurisdiction of the MNRF. The existing right-of-way over these properties is not expected to change.

Required Land Easements

The connection tap to the Customer, north of Shiningtree DS, is located on crown land. Additional right-of-way will be required to accommodate the line tap structures. The additional land requirement will be added to Hydro One's master Land Use Permit with the MNRF.

Temporary construction needs, such as temporary work headquarters, off corridor access, material staging and laydown areas, will be licensed from landowners as needed to facilitate the refurbishment of the transmission line and connection to Iamgold. Temporary rights will be acquired by Hydro One at mutually agreeable terms with the impacted property owners.

For full disclosure, as part of Hydro One's sustainment activities along T61S, Hydro One will investigate whether any existing easements associated with the existing Hydro One right-of-way are unregistered. If so, Hydro One will formally register these easements. The registered easements will be obtained at market value, with Hydro One paying for the registration fees.

Early Access to Land

It is not expected that Hydro One will require early access to lands that are not part of the existing transmission right-of-way. If access to particular areas of the corridor is required prior to construction, Hydro One will obtain licences from property owners of impacted lands on mutually agreeable terms, as with any temporary requirement during the construction phase of the Project.

Land Acquisition Process

Hydro One will be making offers to property owners based on market value principles where registered easements are required. All reasonable legal fees, survey, and registration costs associated with the easements will be borne by Hydro One. Where temporary rights are required during the construction phase of the Project, Hydro One will offer affected owners a reasonable licence fee for the use of their property. After construction, Hydro One will restore any land used for construction to its original condition.

Copies of Hydro One's Offer to Grant an Easement, Temporary Access, and Temporary Work Headquarters and Laydown area are included at the end of this schedule as **Attachments 1 through 3**.

OFFER TO GRANT AN EASEMENT TO HYDRO ONE NETWORKS INC.

I, *INSERT NAME* (the "Transferor"),

Being the owner of *INSERT LEGAL DESCRIPTION OF PROPERTY* (herein called the "Lands") in consideration of payment of the sum of $*INSERT VALUE* (*INSERT VALUE*) (THE "**OFFER CONSIDERATION**"), and other good and valuable consideration (the sufficiency of which consideration is hereby acknowledged), hereby covenants and agrees as follows:

1. (a) THE Transferor hereby grants to Hydro One Networks Inc. its successors and assigns (the "Transferee") the exclusive right, irrevocable during the periods of time below specified in paragraph 2, (the **"Offer")** to purchase, free from all encumbrances and upon the terms and conditions hereinafter set out, the perpetual rights, easements and privileges set out in the Transfer and Grant of Easement document (the **"Transfer of Easement"** annexed hereto as Schedule "A" (the **"Rights")** in, through, under , over, across, along and upon that portion of the above Lands as shown highlighted in red in Schedule "B" (the **"Strip"**).

   (b) THE purchase price for the Rights shall be the sum of *INSERT VALUE* **DOLLARS ($ *INSERT VALUE*)** lawful money of Canada to be paid by cash or uncertified cheque to the Transferor on Closing (the "**Purchase Price**").

2. THIS Offer may be accepted by the Transferee any time within 60 Days from the date of this Agreement by a letter delivered or facsimile transmission or mailed postage prepaid and registered, to the Transferor at the address set out in paragraph 12. If this Offer is not accepted within this time frame, this Agreement and everything herein contained shall be null, void and of no further force or effect. If this Offer is accepted by the Transferee in the manner aforesaid, this Agreement and the letter accepting such Offer shall then become a binding contract between the parities, and the same shall be completed upon the terms herein provided for.

3. THE Transfer of Easement arising from the acceptance of this Offer shall be executed and delivered to the Transferee on or before the One Hundred and Twentieth (120th) day after the date of Transferee's acceptance of this Offer (the "**Closing**") and time shall in all respects be of the essence hereof.

4. IF the Transferee accepts the Offer herein: a) the Transferee shall not grant or transfer an easement or permit, or create any encumbrance over or in respect of the Strip prior to registration of the Transfer of Easement, and b) the Transferee has permission to approach prior encumbrancers or any third parties who have existing interests in the strip to obtain all necessary consents, postponements or subordinations (in registrable form) from all current and future prior encumbrancers and third parties, if necessary, consenting to this Transfer of Easement, and/or postponing their respective rights, title and interest so as to place such Rights and Transfer of Easement in first priority on title to the Strip.

5. TITLE to the Strip shall at Closing be good and free from all registered restrictions, charges, liens, easements and encumbrances of any kind whatsoever except for those matters disclosed in Schedule "C" annexed hereto.

6. The Transfer of Easement and all ancillary documents necessary to register same on title shall be prepared by and at the expense of the Transferee and shall be substantially in the form as the annexed Schedule "A". The Transferor hereby covenants and agrees that the Transferee may, at its option, register this Agreement or Notice thereof, and the Transfer of Easement on title to the Lands, and the Transferor hereby covenants and agrees to execute, at not further cost or condition to the Transferee, such other instruments, plans and documents as may reasonably be required by the transferee to effect registration of this Agreement or Notice thereof prior to closing and the Transfer of Easement at any time hereafter.

7. THE Transferor covenants and agrees with Transferee that it has the right to convey the Rights without restriction and that Transferee will quietly possess and enjoy the Rights and that the Transferor will execute upon request such further assurances of the Rights as may be requisite to give effect to the provisions of this Agreement.

8. AS of the date of the Transferee's acceptance of the Offer, the Transferor grants to the Transferee, in consideration of the Offer Consideration, free from all encumbrances, easements and restrictions the following unobstructed and exclusive rights, easements, rights of way, covenants, agreements and privileges in, through, under, over, across, along and upon the Strip:

(a) To enter and lay down, install, construct, erect, maintain, open, inspect, add to, enlarge, alter, repair and keep in good condition, move, remove, replace, reinstall, reconstruct, relocate, supplement and operate and maintain at all times in, through, under, over, across, along and upon the strip an electrical transmission system and telecommunications system consisting in both instances of pole structures, steel towers, anchors, guys and braces and all such aboveground or underground lines, wires, cables, telecommunication cables, grounding electrodes, conductors, apparatus, works accessories, associated material and equipment, and appurtenances pertaining to or required by either such system (all or any of which are herein individually or collectively called the **"Works")** as in the opinion of the Transferee are necessary or convenient thereto for use as required by Transferee in its undertaking from time to time, or a related business venture.

(b) To enter on and selectively cut or prune, and to clear and keep clear, and remove all trees (subject to compensation to Owners for merchantable wood values), branches, bush and shrubs and other obstructions and materials in, over or upon the Strip, and without limitation, to cut and remove all leaning or decayed trees located on the Lands whose proximity to the Works renders them liable to fall and come in contact with the Works or which may in any way interfere with the safe, efficient or serviceable operation of the Works or this easement by the Transferee.

(c) To conduct all engineering, legal surveys, and make soil tests, soil compaction and environmental studies and audits in, under, on and over the Strip as the Transferee in its discretion considers requisite.

(d) To erect, install, construct, maintain, repair and keep in good condition, move, remove, replace and use bridges and such gates in all fences which are now or may hereafter be on the Strip as the Transferee may form time to time consider necessary.

(e) To clear the Strip and keep it clear of all buildings, structures and other obstructions of any nature whatever including removal of any materials which in the opinion of the Transferee are hazardous to the line. Notwithstanding the foregoing, in all cases where in the sole discretion of the Transferee the safe operation and maintenance of the line is not endangered or interfered with, the Transferor from time to time or the person or persons entitled thereto, may with prior written approval of the Transferee, at his or her own expense, construct and maintain roads, lanes, walks drains, sewers, water pipes, oil and gas pipelines, and fences (not to exceed 2 metres in height) on or under the Strip or any portion thereof, provided that prior to commencing any such installation, the Transferor shall give the Transferee 30 days notice in writing so as to enable Transferee to have a representative inspect the site and be present during the performance of the work and that the Transferor complies with any instructions which may be given by such representative in order that such work may be carried out ins such a manner as not to endanger, damage or interfere with the line.

(f) To enter on, and exit from, and to pass and repass at any and all times in, over, along, upon, across, through and under the Strip and so much of the Lands as may be reasonably necessary, at all reasonable times, for the Transferee and its respective officers, employees, workers, permittees, servants, agents, contractors and subcontractors, with or without vehicles, supplies, machinery, plant, material and equipment for all purposes necessary or convenient to the exercise and enjoyment of the said rights and easement subject to payment by the Transferee of compensation for any crop or other physical damage only to the Land caused by the exercise of this right of entry and passageway; and

(g) To remove, relocate and reconstruct the line on or under the Strip, subject to payment by the Transferee of additional compensation for any damage caused thereby.

9. THIS Agreement and Grant of Easement Rights shall both be subject to the condition that the provisions of the *Planning Act*, R.S.O. 1990, c. P. 13, as amended, have, in the opinion of Transferee, been satisfactorily complied with. If after consultation with Provincial agencies and Municipalities, Hydro One Networks Inc., decides that the provisions of the *Planning Act*, R.S.O., c.P. 13, and amendments thereto, have not been or cannot be complied with, it may , at its option, cancel this Agreement.

10. ANY documents or money payable hereunder may be tendered upon the parties hereto or their respective solicitors and money may be tendered by negotiable uncertified cheque or cash.

11. ANY acceptance of this Offer, demand, notice or other communication to be given in connection with this Agreement shall be given in writing and shall be given by personal deliver, by registered mail postage prepaid,or by facsimile transmission, addressed to the recipient as follows:

TO TRANSFEROR:	**TO TRANSFEREE:**
	Hydro One Networks Inc.
NAME	**Real Estate Services**
ADDRESS	**PO BOX 1050**
PHONE NUMBER	**Milton, ON, L9T 5B9**
	Attention:
	Fax:

or to such other address, facsimile number or individual as may be designated by notice given by either party to the other. Any acceptance of this offer, demand notice or other communication shall be conclusively deemed to have been given when actually received by the addressee or upon the second day after the day of mailing.

12. THE Transferor represents that he is not now and at the time of Closing shall not be a spouse within the meaning of the *Family Law Act*, R.S.O. 1990, c.F. 3, as amended, failing which, the Transferor shall cause this Agreement and all related documents to be accepted and consented to in writing by the spouse of the Transferor to the satisfaction of the Transferee and at not further cost or condition.

13. IN the event of and upon acceptance of this Offer by Hydro One Networks Inc. in manner aforesaid this Agreement and the letter accepting such Offer shall then become a binding contract of sale and purchase between the parties, and the same shall be completed upon the terms herein provided for.

14. THE Transferor covenants and agrees that if and before the Transferor sells, transfers, assigns, disposes (or otherwise parts with possession) of all or part of the Lands to a third party(the “Third Party”) the Transferor shall use best efforts to ensure that the third party assumes the burden and benefit of this Agreement, and agrees to be bound by it. Accordingly the Transferor covenants and agrees to use best efforts to obtain from the Third Party a written acknowledgement and agreement that the Third Party is aware of this Agreement and will continue to be bound by the terms, conditions and stipulations of this Agreement.

15. ALL covenants herein contained shall be construed to be several as well as joint, and wherever the singular and the masculine are used in this Agreement, the same shall be construed as meaning the plural or the feminine or neuter, where the context or the identity of the Transferor/Transferee so requires.

16. THE burden and benefit of this Agreement shall run with the Strip and the works and undertaking of the Transferee and shall be binding upon and enure to the befit of the parties hereto and their respective heirs, executors, administrators, successors and assigns.

IN WITNESS WHEREOF the Transferor has hereunto set his hand and seal to this Agreement, this _____day of _____, 2015.

SIGNED, SEALED AND DELIVERED
In the presence of

)
)
) _____
INSERT NAME

SIGNED, SEALED AND DELIVERED
In the presence of) Consent Signature & Release of
) Transferor's Spouse, if non-owner
)
)
) _____

HYDRO ONE NETWORKS INC.

_____
Name:
Title:

I have authority to bind the Corporation

SCHEDULE "A"

TRANSFER AND GRANT OF EASEMENT

The Transferor is the owner in fee simple and in possession of *INSERT LEGAL DESCRIPTION OF PROPERTY* (The **"Lands"**).

The Transferee has erected, or is about to erect, certain Works (as more particularly described in paragraph 1(a) in, through, under, over, across, along and upon the Lands.

1. THE Transferor hereby grants and conveys to Hydro One Networks Inc., its successors and assigns the rights and easement, free from all encumbrances and restrictions, the following unobstructed and exclusive rights, easements, rights-of-way, covenants, agreements and privileges in perpetuity (the **"Rights")** in, through, under, over across, along and upon that portion of the Lands of the Transferor described herein as *INSERT DESCRIPTION* (the **"Strip"**) for the following purposes:

(a) To enter and lay down, install, construct, erect, maintain, open, inspect, add to, enlarge, alter, repair and keep in good condition, move, remove, replace, reinstall, reconstruct, relocate, supplement and operate and maintain at all times in, through, under, over, across, along and upon the Strip an electrical transmission system and telecommunications system consisting in both instances of pole structures, steel towers, anchors, guys and braces and all such aboveground or underground lines, wires, cables, telecommunications cables, grounding electrodes, conductors, apparatus, works, accessories, associated material and equipment, and appurtenances pertaining to or required by either such system (all or any of which are herein individually or collectively called the ("**Works**") as in the opinion of the Transferee are necessary or convenient thereto for use as required by Transferee in its undertaking from time to time, or a related business venture.

(b) To enter on and selectively cut or prune, and to clear and keep clear, and remove all trees (subject to compensation to Transferor for merchantable wood values), branches, bush and shrubs and other obstructions and materials, over or upon the Strip, and without limitation, to cut and remove all leaning or decayed trees located on the Lands whose proximity to the Works renders them liable to fall and come in contact with the Works or which may in any way interfere with the safe, efficient or serviceable operation of the Works or this easement by the Transferee.

(c) To conduct all engineering, legal surveys, and make soil tests, soil compaction and environmental studies and audits in, under, on and over the Strip as the Transferee in its discretion considers requisite.

(d) To erect, install, construct, maintain, repair and keep in good condition, move, remove, replace and use bridges and such gates in all fences which are now or may hereafter be on the Strip as the Transferee may from time to time consider necessary.

(e) Except for fences and permitted paragraph 2(a) installations, to clear the Strip and keep it clear of all buildings, structures, erections, installations, or other obstructions of any nature (hereinafter collectively called the **"obstruction"**) whether above or below ground, including removal of any materials and equipment or plants and natural growth, which in the opinion of the Transferee, endanger its Works or any person or property or which may be likely to become a hazard to any Works of the Transferee or to any person or property or which do or may in any way interfere with the safe, efficient or serviceable operation of the Works or this easement by the Transferee.

(f) To enter on and exit by the Transferor's access routes and to pass and repass at all times in, over, along, upon and across the Strip and so much of the Lands as is reasonably required, for Transferee, its respective officers, employees, agents, servants, contractors, subcontractors, workmen and permittees with or without all plant machinery, material, supplies, vehicles and equipment for all purposes necessary or convenient to the exercise and enjoyment of this easement subject to compensation afterwards for any crop or other physical damage only to the Lands or permitted structures sustained by the Transferor caused by the exercise of this right of entry and passageway.

(g) To remove, relocate and reconstruct the line on or under the Strip subject to payment by the Transferee of additional compensation for any damage caused thereby.

2. THE Transferor agrees that:

(a) It will not interfere with any Works established on or in the Strip and shall not, without the Transferee's consent in writing erect or cause to be erected or permit in, under or upon the Strip any obstruction or plant or permit any trees, bush, shrubs, plants or natural growth which does or may interfere with the Rights granted herein. The Transferor agrees it shall not, without the Transferee's consent in writing, change or permit the existing configuration, grade or elevation of the Strip to be changed and the Transferor further agrees that no excavation or opening or work which may disturb or interfere with the existing surface of the Strip shall be done or made unless consent therefore in writing has been obtained from Transferee, provided however, that the Transferor shall not be required to obtain such permission in case of emergency. Notwithstanding the foregoing, in cases where in the reasonable discretion of the Transferee, there is no danger or likelihood of danger to the Works of the Transferee or to any persons or property and the safe or serviceable operation of this easement by the Transferee is not interfered with, the Transferor may at its expense and with the prior written approval of the Transferee, construct and maintain roads, lanes walks, drains, sewers water pipes, oil and gas pipelines, fences (not to exceed 2 metres in height) and service cables on or under the Strip (the **"Installation"**) or any portion thereof; provided that prior to commencing such Installation, the transferor shall give to the Transferee thirty (30) days notice in writing thereof to enable the Transferee to have a representative present to inspect the proposed Installation during the performance of such work, and provided further that Transferor comply with all instructions given by such representative and that all such work shall be done to the reasonable satisfaction of such representative. In the event of any unauthorised interference aforesaid or contravention of this paragraph, or if any authorised interference, obstruction or Installation is not maintained in accordance with the Transferee's instructions or in the Transferee's reasonable opinion, may subsequently interfere with the Rights granted herein, the Transferee may at the Transferor's expense, forthwith remove, relocate, clear or correct the offending interference, obstruction , Installation or contravention complained of from the Strip, without being liable for any damages cause thereby.

(b) notwithstanding any rule of law or equity, the Works installed by the Transferee shall at all times remain the property of the Transferee, notwithstanding that such Works are or may become annexed or affixed to the Strip and shall at anytime and from time to time be removable in whole or in part by Transferee.

(c) no other easement or permission will be transferred or granted and no encumbrances will be created over or in respect to the Strip, prior to the registration of a Transfer of this grant of Rights.

(d) The Transferor will execute such further assurances of the Rights in respect of this grant of easement as may be requisite.

(e) The Rights hereby granted:

(i) shall be of the same force and effect to all intents and purposes as a covenant running with the Strip

(ii) is declared hereby to be appurtenant to and for the benefit of the Works and undertaking of the Transferee described in paragraph 1(a)

3. THE Transferee covenants and agrees to obtain at its sole cost and expense all necessary postponements and subordinations (in registrable form) from all current and future prior encumbrancers, postponing their respective rights, title and interest to the transfer of Easement herein so as to place such Rights and easement in first priority on title to the Lands.

4. THERE are no representations, covenants agreements, warranties and conditions in any way relating to the subject matter of this grant of Rights whether expressed or implied, collateral or otherwise except those set forth herein.

5. NO waiver of a breach or any of the covenants of this grant of Rights shall be construed to be a waiver of any succeeding breach of the same or any other covenant.

6. THE burden and benefit of this transfer of Rights shall run with the Strip and the Works and undertaking of the Transferee and shall extend to, be binding upon and enure to the

benefit of the parties hereto and their respective heirs, executors, administrators, successors and assigns.

SCHEDULE “B”

SKETCH

SCHEDULE "C"

PERMITTED EMCUMBRANCES

NIL

Temporary Access and Temporary Access Road

THIS AGREEMENT made in duplicate the _____day of _____20XX

Between:

XXXXXXXXX

(hereinafter referred to as the "Grantor")
OF THE FIRST PART

--- and ---

HYDRO ONE NETWORKS INC.

(hereinafter referred to "HONI")
OF THE SECOND PART

WHEREAS the Grantor is the owner in fee simple and in possession of certain lands legally described as ***(INSERT LEGAL DESCRIPTION)*** **(the "Lands").**

WHEREAS HONI will be constructing new electrical transmission facilities (the "Transmission Facilities") ***THIS IS THE INTENT OF PROJECT*** on a portion of the Lands highlighted in XXX all of which is shown on the sketch attached hereto as Schedule "A" (the "Access Lands"), and collectively referred to as the "Works".

WHEREAS the Owner is agreeable in allowing HONI to enter onto the Lands in order to commence construction activities in conjunction with the Works, which activities shall include ***INSERT ANY OTHER RELATIVE ACTIVITIES*** but not limited to soil studies, archaeological studies, appraisals and surveys in, on or below the Lands subject to the terms and conditions contained herein (the "Activities").

NOW THEREFORE THIS AGREEMENT WITNESSES THAT in consideration of the lump sum of **XXXXXXX** now paid by HONI to the Owner, and the respective covenants and agreements of the parties hereinafter contained and other valuable consideration, the receipt and sufficiency of which are hereby acknowledged by the parties hereto, the parties hereto agree as follows:

1. The Grantor hereby grants to HONI the right to enter upon the Lands for the purpose of commencing construction of the Works, as of the date this Agreement is executed by both parties.

2. The Grantor hereby grants to HONI, as of the date this Agreement, (i) the right to commence the Activities on the Access Lands; and (ii) the right to enter upon and exit from, and to pass and repass at any and all times in, over, along, upon, across, through and under the Access Lands as may be reasonably necessary, at all reasonable times, for HONI and its respective officers, employees, workers, permittees, servants, agents, contractors and subcontractors, with or without vehicles, supplies, machinery, plant, material and equipment for the purpose of the Activities. HONI agrees that it shall take all reasonable care while undertaking the Activities.

3. The term of this Agreement and the permission granted herein shall be two (2) years from the date written above (the "Term"). HONI may, in its sole discretion, and upon 60 days notice to the Grantor, extend the Term for an additional length of time, which shall be negotiated between the parties.

4. Upon the expiry of the Term or any extension thereof, HONI shall repair any physical damage to the Access Lands and/or Lands resulting from HONI's use of the Access Lands and the permission granted herein; and, shall restore the Access Lands to its original condition so far as possible and practicable.

5. All agents, representatives, officers, directors, employees and contractors and property of HONI located at any time on the Access Lands shall be at the sole risk of HONI and the Grantor shall not be liable for any loss or damage or injury (including loss of life) to them or it however occurring except and to the extent to which such loss, damage or injury is caused by the negligence or willful misconduct of the Grantor.

6. HONI agrees that it shall indemnify and save harmless the Grantor from and against all claims, demands, costs, damages, expenses and liabilities (collectively the "Costs") whatsoever arising out of HONI's presence on the Access Lands or of its activities on or in connection with the Access Lands arising out of the permission granted herein except to the extent any of such Costs arise out of or are contributed to by the negligence or willful misconduct by the Grantor.

7. Notices to be given to either party shall be in writing, personally delivered or sent by registered mail (except during a postal disruption or threatened postal disruption), telegram, electronic facsimile to the applicable address set forth below (or to such other address as such party may from time to time designate in such manner):

   TO HONI:

   Hydro One Networks Inc.
   Real Estate Services
   1800 Main Street East
   Milton, Ontario L9T 7S3

   Attention:
   Fax:

   TO GRANTOR:

   XXXXXXXX
   XXXXXXXX

8. Notices personally delivered shall be deemed to have been validly and effectively given on the day of such delivery. Any notice sent by registered mail shall be deemed to have been validly and effectively given on the fifth (5th) business day following the date on which it was sent. Any notice sent by telegram, electronic facsimile or shall be deemed to have been validly and effectively given on the Business Day next following the day on which it was sent. "Business Day" shall mean any day which is not a Saturday or Sunday or a statutory holiday in the Province of Ontario. This Agreement shall be governed by and construed in accordance with the laws of the Province of Ontario and the laws of Canada applicable herein. The parties hereto submit themselves to the exclusive jurisdiction of the Courts of the Province of Ontario.

9. Any amendments, modifications or supplements to this Agreement or any part thereof shall not be valid or binding unless set out in writing and executed by the parties with the same degree of formality as the execution of this Agreement.

10. The burden and benefit of this Agreement shall run with the Lands and everything herein contained shall operate to the benefit of, and be binding upon, the respective heirs; successors, permitted assigns and other legal representatives, as the case may be, or each of the Parties hereto.

IN WITNESS WHEREOF the parties hereto have caused this Agreement to be executed by their duly authorized representatives as of the day and year first above written.

SIGNED, SEALED & DELIVERED
In the presence of:

_____
Witness

OWNER(S):

_____
Name:

SIGNED, SEALED & DELIVERED
In the presence of:

_____
Witness

_____
Name:

HYDRO ONE
HST # 870 865 821 RT001

HYDRO ONE NETWORKS INC.

By: _____
Name:
Title:

I have authority to bind the Corporation

SCHEDULE “A”

PROPERTY SKETCH

Temporary Off Corridor Access Road Calculation Sheet

Market Value:

Existing Road Acreage x Land Rate x Interest Rate x Term

Inconvenience Compensation:

Existing Road Length (ft.) x 1

Proximity Compensation:

Tax Assessed Building Value x Impact Factor x Term x (Proximity Distance Factor)*

**Proximity Distance Factor Based on Attached Grid*

┼ *Calculation only applied to properties with residence or principal farm building within 250 feet of Access Road*

Total Compensation:

Market Value + Inconvenience Compensation + Proximity Compensation

(Rounded to Nearest Hundred) =

THIS AGREEMENT made in duplicate the _____ day of_____ 2018.

Between:

XXXXXXXXXXXXXX

(hereinafter referred to as the "Grantor")

OF THE FIRST PART

--- and ---

HYDRO ONE NETWORKS INC.

(hereinafter referred to "HONI")

OF THE SECOND PART

WHEREAS the Grantor is the owner in fee simple and in possession of certain lands legally described as XXXXXXX being PIN: XXXXXX, collectively referred to as the "Lands".

WHEREAS HONI desires the right to enter onto and use a portion of the Lands in connection with XXXXXX (the "Project").

NOW THEREFORE THIS AGREEMENT WITNESSETH that in consideration of the fee of XXXXX Dollars ($XXXX) per month (the "Monthly Rent") for a sum of XXXXX Dollars ($XXXX) plus Harmonized Sales Tax ("HST") to be paid by HONI to the Grantor, and the mutual covenants herein contained and other good and valuable consideration, the receipt and sufficiency of which are hereby acknowledged, the parties agree as follows:

1. The Grantor hereby grants, conveys and transfers to HONI in, over, along and upon that part of the Lands highlighted in red as shown in Schedule "A" attached hereto (the "Material Yard Storage Area"), the rights and privileges as follows:

(a) for the servants, agents, contractors and workmen of HONI at all times with all necessary vehicles and equipment to pass and repass over the Lands for the purpose of access to the Material Yard Storage Area;
(b) to store, use and maintain upon the Material Yard Storage Area, construction equipment and machinery as may be necessary for HONI's purposes;
(c) to place upon the Material Yard Storage Area, temporary trailers as may be necessary for HONI's purposes of a construction field office for the purposes of the Project; and
(d) to cut and remove all trees, brush and other obstructions made necessary by the exercise of the rights granted hereunder

2. The term of this Agreement and the permission granted herein shall be a term of XX (X) months commencing on XXXX, 2018 and ending XXXX, 2018 (the "Term"). HONI may, in its sole option, and upon XX days' notice to the Grantor, extend the Term on a month to month basis for up to an additional XX months, under the same provisions and conditions contained in this Agreement, including the Monthly Rent.

3. Upon the expiry of the Term or any extension thereof, HONI shall remove and repair any physical damage to the Material Yard Storage Area and/or Lands resulting from HONI's use of the Material Yard Storage Area and the permission granted herein; and, shall restore the Material Yard Storage Area to its original condition so far as reasonably practicable.

4. All agents, representatives, officers, directors, employees and contractors and property of HONI located at any time on the Material Yard Storage Area shall be at the sole risk of HONI and the Grantor shall not be liable for any loss or damage or injury (including loss of life) to them or it however occurring except and to the extent to which such loss, damage or injury is caused by the negligence or willful misconduct of the Grantor.

5. HONI agrees that it shall indemnify and save harmless the Grantor from and against all claims, demands, costs, damages, expenses and liabilities (collectively the "Costs") whatsoever arising out of HONI's presence on the Material Storage Yard Area or of its activities on or in connection with the Material Storage Yard Area arising out of the permission granted herein except to the extent any of such Costs arise out of or are contributed to by the negligence or willful misconduct by the Grantor.

6. Notices to be given to either party shall be in writing, personally delivered or sent by registered mail (except during a postal disruption or threatened postal disruption), telegram, electronic facsimile or other similar means of prepaid recorded communication to the applicable address set forth below (or to such other address as such party may from time to time designate in such manner):

TO HONI:

Hydro One Networks Inc.
Real Estate Services
1800 Main Street East
Milton, Ontario L9T 753

Attention: Aaron Fair
Tel: 416-919-6962

TO GRANTOR:

XXXXXXX
XXXXXXX
XXXXXXX

Attention:
Tel:

7. Notices personally delivered shall be deemed to have been validly and effectively given on the day of such delivery. Any notice sent by registered mail shall be deemed to have been validly and effectively given on the fifth (5th) business day following the date on which it was sent. Any notice sent by telegram, electronic facsimile or other similar means of prepaid recorded communication shall be deemed to have been validly and effectively given on the Business Day next following the day on which it was sent. "Business Day" shall mean any day which is not a Saturday or Sunday or a statutory holiday in the Province of Ontario. This Agreement shall be governed by and construed in accordance with the laws of the Province of Ontario and the laws of Canada applicable herein. The parties hereto submit themselves to the exclusive jurisdiction of the Courts of the Province of Ontario.

8. Any amendments, modifications or supplements to this Agreement or any part thereof shall not be valid or binding unless set out in writing and executed by the parties with the same degree of formality as the execution of this Agreement.

9. The burden and benefit of this Agreement shall run with the Lands and everything herein contained shall operate to the benefit of, and be binding upon, the respective heirs, successors, permitted assigns and other legal representatives, as the case may be, or each of the Parties hereto.

IN WITNESS WHEREOF the parties hereto have caused this Agreement to be executed by their duly authorized representatives as of the day and year first above written.

XXXXXXXXX

SIGNED, SEALED & DELIVERED
In the presence of:

_____
Witness

_____
Name:
Title:
I have authority to bind the Corporation

HYDRO ONE NETWORKS INC.

By: _____
Name:
Title:

I have authority to bind the Corporation

Page 3 of 4

SCHEDULE “A”

*Sketch for reference only, not to scale.

System Impact Assessment

Please refer to **Attachment 1** for the Final System Impact Assessment ("SIA") prepared by the Independent Electricity System Operator (SIA reference # CAA 2017-623).

REPORT

System Impact Assessment Report

CONNECTION ASSESSMENT & APPROVAL PROCESS

Final Report

CAA ID: 2017-623

Project: Cote Gold Project

Connection Applicant: Iamgold Corporation

Engineering Studies Department
Independent Electricity System Operator

June 6, 2018

Document Name	System Impact Assessment Report
Issue	1.0
Reason for Issue	First issue
Effective Date	June 6, 2018

© 2000, Independent Electricity System Operator.

System Impact Assessment Report

Acknowledgement

The IESO wishes to acknowledge the assistance of Hydro One in completing this assessment.

Disclaimers

IESO

This report has been prepared solely for the purpose of assessing whether the connection applicant's proposed connection with the IESO-controlled grid would have an adverse impact on the reliability of the integrated power system and whether the IESO should issue a notice of conditional approval or disapproval of the proposed connection under Chapter 4, section 6 of the Market Rules.

Conditional approval of the proposed connection is based on information provided to the IESO by the connection applicant and Hydro One at the time the assessment was carried out. The IESO assumes no responsibility for the accuracy or completeness of such information, including the results of studies carried out by Hydro One at the request of the IESO. Furthermore, the conditional approval is subject to further consideration due to changes to this information, or to additional information that may become available after the conditional approval has been granted, including but not limited to changes to the information available to or system assumptions made by the IESO at the time of the assessment.

If the connection applicant has engaged a consultant to perform connection assessment studies, the connection applicant acknowledges that the IESO will be relying on such studies in conducting its assessment and that the IESO assumes no responsibility for the accuracy or completeness of such studies including, without limitation, any changes to IESO base case models made by the consultant. The IESO reserves the right to repeat any or all connection studies performed by the consultant if necessary to meet IESO requirements.

Conditional approval of the proposed connection means that there are no significant reliability issues or concerns that would prevent connection of the proposed project to the IESO-controlled grid. However, the conditional approval does not ensure that a project will meet all connection requirements. In addition, further issues or concerns may be identified by the transmitter(s) during the detailed design phase that may require changes to equipment characteristics and/or configuration to ensure compliance with physical or equipment limitations, or with the Transmission System Code, before connection can be made.

This report has not been prepared for any other purpose and should not be used or relied upon by any person for another purpose. This report has been prepared solely for use by the connection applicant and the IESO in accordance with Chapter 4, section 6 of the Market Rules. This report does not in any way constitute an endorsement, agreement, consent or acknowledgment of any kind of the proposed connection for the purposes of obtaining or administering a contract with the IESO for the procurement of electricity supply, generation, demand response, conservation and demand management or ancillary services.

The IESO assumes no responsibility to any third party for any use which it makes of this report. Any liability which the IESO may have to the connection applicant in respect of this report is governed by Chapter 1, section 13 of the Market Rules. In the event the IESO provides a draft of this report to the connection applicant, the connection applicant must be aware that the IESO may revise drafts of this

report at any time in its sole and absolute discretion without notice to the connection applicant. Although the IESO will make reasonable efforts to advise you of any such changes, it is the responsibility of the connection applicant to ensure that the most recent version of this report is being used.

Hydro One

The results reported in this report are based on the information available to Hydro One, at the time of the study, suitable for a System Impact Assessment of this connection proposal.

The short circuit and thermal loading levels have been computed based on the information available at the time of the study. These levels may be higher or lower if the connection information changes as a result of, but not limited to, subsequent design modifications or when more accurate test measurement data is available.

This study does not assess the short circuit or thermal loading impact of the proposed facilities on load and generation customers.

In this report, short circuit adequacy is assessed only for Hydro One circuit breakers. The short circuit results are only for the purpose of assessing the capabilities of existing Hydro One circuit breakers and identifying upgrades required to incorporate the proposed facilities. These results should not be used in the design and engineering of any new or existing facilities. The necessary data will be provided by Hydro One and discussed with any connection applicant upon request.

The ampacity ratings of Hydro One facilities are established based on assumptions used in Hydro One for power system planning studies. The actual ampacity ratings during operations may be determined in real-time and are based on actual system conditions, including ambient temperature, wind speed and project loading, and may be higher or lower than those stated in this study.

The additional facilities or upgrades which are required to incorporate the proposed facilities have been identified to the extent permitted by a System Impact Assessment under the current IESO Connection Assessment and Approval process. Additional project studies may be necessary to confirm constructability and the time required for construction. Further studies at more advanced stages of the project development may identify additional facilities that need to be provided or that require upgrading.

Table of Contents

Table of Contents iii

List of Figures v

List of Tables vi

Executive Summary 1

Conditional Approval for Connection 1

Findings 1

IESO Requirements for Connection 2

IESO Recommendations for Transmitter 4

1. Project Description 5

2. General Requirements 7

2.1 Reliability Standards 7

2.2 Power Factor 7

2.3 Connection Equipment Design 7

2.4 Voltage 7

2.5 Fault Levels 7

2.6 Under Frequency Load Shedding 8

2.7 Telemetry 9

2.8 Revenue Metering 9

2.9 Protection Systems 9

2.10 Restoration 9

2.11 IESO Market Registration Process 10

2.12 Project Status 10

3. Data Verification 12

3.1 Connection Arrangement 12

3.2 Connection Equipment 12

4. Short Circuit Assessment 14

5. Protection Impact Assessment 15

6. System Impact Studies 16

6.1 Existing System 16
6.2 Study Assumptions 18
6.3 Contingencies 21
6.4 Additional Study Assumptions 22
6.5 Thermal Analysis 25
6.6 Voltage Analysis 27
6.7 Line End Opening Study 29
6.8 Motor Starting Study 30
6.9 Total Load Tripped by Configuration Assessment 30
6.10 Special Protection Scheme 31

Appendix A: Assumptions for short circuit study 33

Appendix B: PIA Report 40

List of Figures

Figure 1: Transmission System in the vicinity of Cote Gold Project 6
Figure 2: Connection Arrangement of Cote Gold Project..... 6
Figure 3: Simplified Diagram of the Northeast Ontario Power System.....17
Figure 4: Simplified Diagram of Timmins 115 kV System with the Proposed Tie Switch.....24

List of Tables

Table 1: 115 kV Transmission Line Data 12
Table 2: Main Step-Down Transformer Data 12
Table 3: 115 kV Circuit Breaker Specifications 13
Table 4: 115 kV Disconnect Switch Specifications 13
Table 5: Fault levels at facilities near the project 14
Table 6: Winter Peak Load Forecast for Timmins 115 kV Area 19
Table 7: Summer Peak Load Forecast for Timmins 115 kV Area 20
Table 8: Voltage Ranges for Specific 115 kV buses in the Northeast Zone 20
Table 9: List of Simulated Contingencies 22
Table 10: Northeast Load and Generation Rejection Scheme Matrix 23
Table 11: Circuit Section and Transformer Ratings 25
Table 12: Post-contingency load flow (L4L6/L3L7 O/S and L5L6/L4L7 IBO) 26
Table 13: List of Monitored Buses 27
Table 14: Voltage Results for P13T O/S and Loss of P15T 29
Table 15: Line End Opening Study Results 30
Table 16: Motor Start Study Results 30
Table 17: SPS Selectivity requirements for options (a) and (b) 31
Table 18: Recommended SPS Matrix 32

Executive Summary

Conditional Approval for Connection

Iamgold Corporation (the "connection applicant") is proposing to construct a 44km 115 kV overhead line to supply a new mining facility, Cote Gold (the "project") in the community of Gogma, located in Northeastern Ontario, 114 km south of Timmins. The project will require connection to Shiningtree junction, located at the end of the presently idle 115 kV circuit T2R. T2R is fed from Timmins TS and is owned and operated by Hydro One Networks Inc. (the "Transmitter"). Figure 1 shows the transmission system in the vicinity of the Cote Gold Project.

From the Shiningtree Jct, the project's 44 km 115 kV overhead line will be connected to the project's 115 kV bus via a motorized disconnect switch and a circuit breaker. There are two 115/13.8 kV, 45/60/75 MVA step-down transformers with a motorized disconnect switch and a circuit breaker at the high-voltage side of each transformer. The low-voltage side of each transformer will be connected to separate 13.8 kV buses. The connection applicant is also proposing to install two +25/-5 Mvar SVCs connected to the 13.8 kV buses at the project. The proposed SVCs will be operated in voltage control mode to maintain the voltages at the 13.8 kV buses close to nominal voltage. Figure 2 shows the connection arrangement of the project.

The project will include four standby generators to provide power for essential loads in the event of total loss of power or connection with the transmitter. Therefore, they are not intended to operate in parallel with the grid and not included in the SIA study. It also includes two 7 MVA synchronous condensers, one on each bus, to increase short circuit level to meet the equipment operation requirement at the project. The two 7 MVA synchronous condensers will also help provide reactive power compensation. The synchronous condensers will be operated in reactive power control mode.

The proposed in-service date for this project is January 2021 with an eventual peak load of 72 MW split between the 13.8 kV buses.

This assessment concludes that the proposed connection of the project is expected to have no material adverse impact on the reliability of the integrated power system, provided that all requirements in this report are implemented. Therefore, the assessment supports the release of the Notification of Conditional Approval for Connection of the project.

Findings

The project's impact on the reliability of the integrated power system was evaluated, and based on the study results, the following was identified:

1. The project's connection arrangement and connection equipment are acceptable to the IESO.
2. The power transfer capability on the Hunta Flow South interface decreases 1.3% with the proposed project in-service. This meets the Ontario Resource and Transmission Assessment Criteria (ORTAC) requirement of less than 5%. See section 6.5 for further details.

3. The two proposed +25/-5 Mvar SVCs are adequate to maintain pre-contingency voltage above the minimum required by the ORTAC.
4. In assessing the project's equipment capability provided by the connection applicant the study results show that under an outage of one main step-down transformer the maximum flow on the companion transformer is 77.6 MVA. The connection applicant has confirmed that the main step-down transformers have a 10-day thermal rating higher than 78 MVA.
5. During summer peak load with heavy flow south of Porcupine TS, an outage of Hunta breaker L4L6 followed by an L5L6 Inadvertent Breaker Opening (IBO) results in the H6T line end opening at Hunta SS, causing the loading on circuit H7T to go above its STE rating. Similarly, H6T is overloaded during an outage of L4L7 followed by an L3L7 IBO. This is an existing issue and the proposed project makes the overloading conditions worse. Currently the issue can be managed by curtailing the generation in Northeast. However, it is recommended this be addressed by the transmitter. See section 6.5.2 for further details.
6. In all system conditions, during an outage of P13T, circuits T2R and H6T are connected radially to Hunta SS and the proposed load at the project cannot be supplied due to voltage collapse. This is addressed in requirement #2 for the transmitter. See section 6.4.2 for further details.
7. During an outage of Porcupine breaker K2K3, a K3K4 IBO contingency at Porcupine TS results in circuits P13T and T2R connected radially to Timmins TS and voltage collapse at the proposed project. Additionally, for an outage of Porcupine T3, a contingency involving T4 results in voltage collapse at the proposed project. These situations are addressed in requirement #3 for the transmitter. See section 6.6.1 for further details.
8. The loss of one SVC at the project results in the post-contingency voltage at the project's 115 kV bus below the 108 kV minimum required by the ORTAC. The connection applicant is proposing to implement a load rejection scheme that rejects the project's load upon the loss of the SVC(s).
9. Assuming the voltage at the Timmins 115 kV bus is at its maximum continuous voltage (138 kV), opening 115 kV circuit T2R results in a line end open voltage of 141.2 kV. This is addressed in requirement #3 for the connection applicant. See section 6.7 for further details.

IESO Requirements for Connection

Transmitter Requirements

The following requirements are applicable for the transmitter for the incorporation of the project:

(1) The transmitter is required to add new redundant protections for 115 kV circuit T2R at Timmins TS and modify the line protections of 115 kV circuits P13T and P15T, as identified in the Protection Impact Assessment (PIA).

The transmitter must submit any protection modifications that are different from those considered in this SIA at least six (6) months before any modifications are to be implemented on the existing protection systems. If those modifications result in adverse reliability impacts, mitigation solutions must be developed.

(2) The transmitter is required to install a normally open load interrupting switch between the two Timmins 115 kV buses. The switch must be operated closed during an outage of P13T to avoid voltage collapse at the project. The proposed tie switch is shown in Figure 4.

(3) The transmitter is required to include the proposed project in a Special Protection Scheme (SPS). The SPS must have the capability to trip the proposed project for the loss of 500 kV circuits D501P, P502X, Porcupine autotransformer T3 or T4, and opening of both K2K3 and K3K4 breakers (N-1-1) at Porcupine TS.

There are two options to implement the SPS for the proposed project: (a) expanding the existing Northeast Load and Generation Rejection (NE LGR) scheme to include the proposed project, provided the expanded SPS remains classified as Type III; or (b) creating a new Cote Gold SPS. The transmitter's decision will be subject to IESO approval.

(4) It is required that the transmitter install a disconnect switch at Shiningtree Jct on 115 kV circuit T2R to serve as the demarcation point between the equipment owned by the transmitter and the applicant. The transmitter must ensure that the disconnect switch meets all applicable requirements from the ORTAC and the TSC. The transmitter is required to register the disconnection switch during the IESO Market Registration process.

Connection Applicant Requirements

Project Specific Requirements:

The following specific requirements are applicable for the incorporation of the project. Specific requirements pertain to the level of reactive power compensation needed, operating restrictions, special protection system(s), upgrading of equipment and any project specific items not covered in the general requirements.

(1) The connection applicant is required to provide a detailed description of the proposed load shedding scheme to mitigate voltage issues following the loss of the SVCs at the project during the Market Registration process.

(2) It is required that a 6 Mvar reactor rated at 138 kV be installed at the project's 115 kV bus to control the voltage when line T2R is open at the proposed project. The reactor must be in-service for energizing the T2R line and out-of-service when the load at the proposed project is in service.

(3) The connection applicant did not provide a Short Term Emergency (STE) rating for the new T2R line section from Shiningtree Jct to the project. It is required that the connection applicant provide the rating during the Market Registration Process.

(4) The project shall participate in the SPS as described in requirement #3 for the transmitter. The connection applicant shall work together with the transmitter to implement the SPS.

General Requirements: The connection applicant shall satisfy all applicable requirements specified in the Market Rules, the Transmission System Code (TSC) and reliability standards. Some of the general requirements that are applicable to this project are presented in detail in Section 2 of this report.

IESO Recommendations for Transmitter

(1) It is recommended that the transmitter include the opening of Hunta SS 115 kV breakers L4L6+L5L6 and L3L7+L4L7 as recognized configurations that trigger selections for H6T and H7T contingencies, respectively, within the NE LGR scheme. This addresses finding #5.

(2) It is recommended that all the functionalities related to Timmins area load present in the NE LGR scheme be transferred to the new SPS if option (b) is chosen as described in transmitter requirement #3. Should the transmitter accept this recommendation, the transmitter will need to ensure that operation of all transferred functionalities do not take longer in the new scheme as compared to the NE LGR scheme.

– End of Section –

1. Project Description

Iamgold Corporation (the "connection applicant") is proposing to construct a 44 km 115 kV overhead line to supply a new mining facility, Cote Gold (the "project") in the community of Gogma, located in Northeastern Ontario, 114 km south of Timmins. The project will require connection to Shiningtree junction, located at the end of the presently idle 115 kV circuit T2R. T2R is fed from Timmins TS and is owned and operated by Hydro One Networks Inc. (the "Transmitter"). Figure 1 shows the transmission system in the vicinity of the Cote Gold Project.

From the Shiningtree Jct, the project's 44 km 115 kV overhead line will be connected to the project's 115 kV bus via a motorized disconnect switch and a circuit breaker. There are two 115/13.8 kV, 45/60/75 MVA step-down transformers with a motorized disconnect switch and a circuit breaker at the high-voltage side of each transformer. The low-voltage side of each transformer will be connected to separate 13.8 kV buses. The connection applicant is also proposing to install two +25/-5 Mvar SVCs connected to the 13.8 kV buses at the project. The proposed SVCs will be operated in voltage control mode to maintain the voltage at the 13.8 kV buses close to nominal voltage. Figure 2 shows the connection arrangement of the project.

The project will include four standby generators to provide power for essential loads in the event of total loss of power or connection with the transmitter. Therefore, they are not intended to operate in parallel with the grid and not included in the SIA study. It also includes two 7 MVA synchronous condensers, one on each bus, to increase short circuit level to meet the equipment operation requirement at the project. The two 7 MVA synchronous condensers will also help provide reactive power compensation. The synchronous condensers will be operated in reactive power control mode.

The proposed in-service date for this project is January 2021 with an eventual peak load of 72 MW split between the 13.8kV buses.

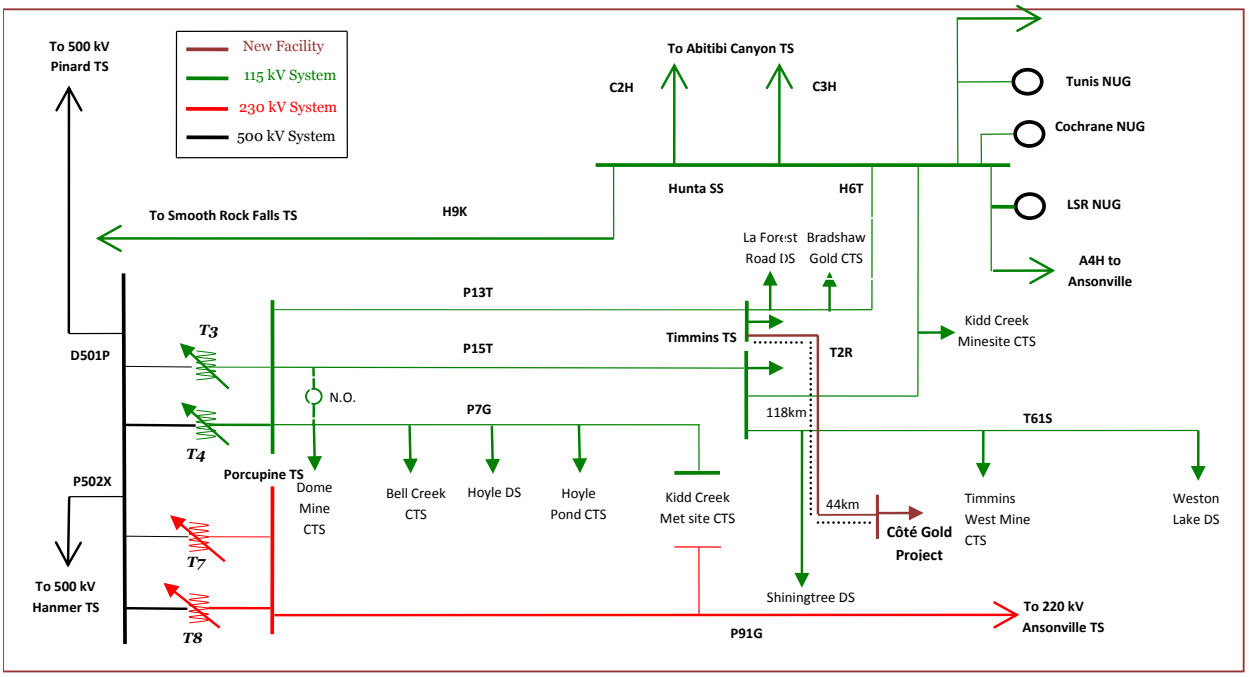

Figure 1: Transmission System in the vicinity of Cote Gold Project

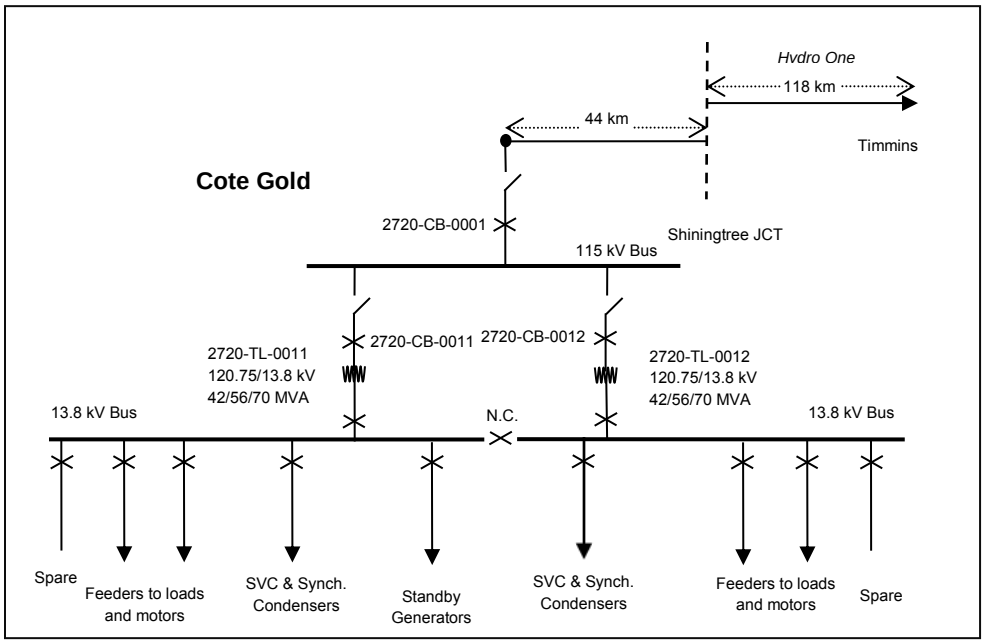

Figure 2: Connection Arrangement of Cote Gold Project

– End of Section –

2. General Requirements

The connection applicant shall satisfy all applicable requirements specified in the Market Rules and the Transmission System Code. This section highlights some of the general requirements that are applicable to the project.

2.1 Reliability Standards

As currently assessed, the project does not fall within the North American Electric Reliability Corporation's (NERC) definition of the Bulk Electric System (BES) or the Northeast Power Coordinating Council's (NPCC) of the Bulk Power System (BPS). As such, the project does not have to meet NERC or NPCC requirements and is only required to meet obligations and requirements under the IESO's Market Rules at this time. However, like any other system element in Ontario, the BPS and BES classifications of this project will be periodically re-evaluated as the electrical system evolves.

2.2 Power Factor

As per Appendix 4.3 of the Market Rules, the connection applicant must have the capability to maintain the power factor within the range of 0.9 lagging and 0.9 leading as measured at the defined meter point of the project.

The defined meter point is typically defined as the high voltage side of the transformer. However, in the proposed project the defined meter point is at Shiningtree junction since the connection applicant owns the circuit from Shiningtree junction to Cote Gold.

The connection applicant has indicated that they will regulate power factor to 0.98 at the high voltage side of the transformer. Once the project is incorporated, if the IESO determines that the power factor is not within the required range, the connection applicant will be required to install reactive power compensation device(s) at the project.

2.3 Connection Equipment Design

The connection applicant shall ensure that the connection equipment is designed to be fully operational in all reasonably foreseeable ambient temperature conditions. The connection equipment must also be designed so that the adverse effects of its failure on the IESO-controlled grid are mitigated.

2.4 Voltage

The connection applicant must ensure that the project's equipment meets the voltage requirements specified in section 4.2 and section 4.3 of the Ontario Resource and Transmission Assessment Criteria (ORTAC). The connection applicant must ensure that the project's 115 kV equipment can withstand the maximum continuous operating voltage in the Timmins area, 138 kV.

2.5 Fault Levels

As per the TSC, the connection applicant shall ensure the project's 115 kV connection equipment is designed to withstand the fault levels in the area. If any future system changes result in an increased fault level higher than the project's equipment capability, the connection applicant is required to replace that

equipment with higher rated equipment capable of withstanding the increased fault level, up to maximum fault level specified in the TSC. Appendix 2 of the TSC establishes the maximum fault levels for the transmission system. For the 115 kV system, the maximum 3 phase and single line to ground symmetrical fault levels are 50 kA.

The connection applicant shall ensure that the 115 kV breakers installed at the project have a rated interrupting time of 5 cycles or less. Fault interrupting devices installed at the project must be able to interrupt fault currents at the maximum continuous voltage in the Timmins area, 138 kV.

2.6 Under Frequency Load Shedding

The connection applicant has an aggregate peak load at all its owned facilities, including the project, which is greater than 25 MW. Thus, the connection applicant is required to participate in the Under-Frequency Load Shedding (UFLS) program according to Section 11.3 of the Market Manual Part 7.1.

The connection applicant is required to install UFLS facilities at the project to allow for the detection of under-frequency conditions and the selection and tripping of load via circuit breakers.

The connection applicant must select 35% of aggregate peak load among its owned facilities for under-frequency tripping, based on a date and time specified by the IESO that approximates system peak, according to section 10.4 of Chapter 5 of the Market Rules.

As the connection applicant has a peak load of 50 MW or more and less than 100 MW at all its owned facilities, the UFLS relay connected loads shall be set to achieve the amount to be shed stated in the following table:

UFLS Stage	Frequency Threshold (Hz)	Total Nominal Operating Time (s)	Load Shed at stage as % of Connection Applicant's Load	Cumulative Load Shed at stage as % of Connection Applicant's Load
1	59.5	0.3	≥ 17	≥ 17
2	59.1	0.3	≥ 18	≥ 35

Capacitor banks connected to the same facility bus as the load should be shed by UFLS relay at 59.5 Hz with a time delay of 3 seconds and should be coordinated in conjunction with the relevant transmitter, if applicable.

The maximum load that can be connected to any single UFLS relay is 150 MW to ensure that the inadvertent operation of a single under-frequency relay during the transient period following a system disturbance does not lead to further system instability.

2.7 Telemetry

In accordance with Section 7.5 of Chapter 4 of the Market Rules, the connection applicant shall provide to the IESO the applicable telemetry data listed in Appendix 4.17 of the Market Rules on a continual basis. The data shall be provided in accordance with the performance standards set forth in Appendix 4.22, subject to Section 7.6A of Chapter 4 of the Market Rules. The whole telemetry list will be finalized during the IESO Market Registration process.

The connection applicant must install monitoring equipment that meets the requirements set forth in Appendix 2.2 of Chapter 2 of the Market Rules. As part of the IESO Market Registration process, the connection applicant must also complete end to end testing of all necessary telemetry points with the IESO to ensure that standards are met and that sign conventions are understood. All found anomalies must be corrected before IESO final approval to connect any phase of the project is granted.

2.8 Revenue Metering

If revenue metering equipment is being installed as part of the project, the connection applicant should be aware that revenue metering installations must comply with Chapter 6 of the Market Rules. For more details the connection applicant is encouraged to seek advice from their Metering Service Provider (MSP) or from the IESO metering group.

2.9 Protection Systems

The connection applicant shall ensure that the protection systems are designed to satisfy all the requirements of the Transmission System Code and any additional requirements identified by the transmitter. New protection systems must be coordinated with the existing protection systems.

The protection systems within the project must only trip the appropriate equipment required to isolate the fault. After the project begins commercial operation, if an improper trip occurs due to events within the project, the project may be required to be disconnected from the IESO-controlled grid until the problem is resolved.

In the future, as the electrical system evolves, the project may have BES elements, or be placed on the BPS list, or designated as essential by either the IESO or by the transmitter. BPS and essential equipment must be protected by redundant protection systems in accordance with section 8.2.1a of the TSC. These redundant protections systems must satisfy all requirements of the TSC, and in particular, they must be physically separated, and not use common components. Protections for the transmission voltage BES elements must at least have redundant protective relays and redundant tripping circuitry, including dual breaker trip coils.

2.10 Restoration

According to the Market Manual 7.8 which states restoration participant criteria and obligations, the connection applicant is not required to be a restoration participant at this time.

As currently assessed by the IESO, the project is not classified as a Key Facility that is required to establish a Basic Minimum Power System following a system blackout. Key Facility and Basic Minimum Power System are terms defined in the NPCC Glossary of Terms.

2.11 IESO Market Registration Process

The connection applicant must initiate the IESO's Market Registration process at least eight months prior to the commencement of any project related outages.

The connection applicant is required to provide "as-built" equipment data for the project during the IESO Market Registration process to allow the IESO to incorporate this project into IESO work systems and to perform any additional reliability studies.

If the submitted equipment data differ materially from the ones used in this assessment, then further analysis of the project may need to be done by the IESO before final approval to connect is granted.

At the sole discretion of the IESO, performance tests may be required at the project and its connection facilities. The objectives of these tests are to demonstrate that equipment performance meets the IESO requirements, and to confirm submitted data are suitable for IESO purposes. The transmitter may also have its own testing requirements. The IESO and the transmitter will coordinate their tests, share measurements and cooperate on analysis to the extent possible.

Once the IESO's Market Registration process has been successfully completed, the IESO will provide the connection applicant with a Registration Approval Notification (RAN) document, confirming that the project is fully authorized to connect to the IESO-controlled grid. For more details about this process, the connection applicant is encouraged to contact IESO's Market Registration at market.registration@ieso.ca

During the IESO Market Registration process, a new Facility Description Document (FDD) for the proposed SPS must be provided six months prior to in-service. The FDD must contain the finalized SPS matrix as well as expected operating times. The actual operating times must be measured during commissioning, documented as a Performance Validation Record, and posted on Hydro One - IESO secured web portal.

If the FDD or performance testing as per the Performance Validation Record indicates a change in design or slower than expected operating times, than what was assumed in this assessment, then further analysis of the project will need to be done by the IESO. This may delay the grant of IESO final approval.

2.12 Project Status

As per Market Manual 2.10, the connection application will be required to provide a status report of its proposed project with respect to its progress upon request of the IESO. The project status report form can be found on the IESO Web site at http://www.ieso.ca/-/media/files/ieso/document-library/market-rules-and-manuals-library/market-manuals/market-administration/caa-f1399-statusreport.doc. Failure to comply with project status requirements listed in Market Manual 2.10 will result in the project being withdrawn.

The connection applicant will be required to also provide updates and notifications in order for the IESO to determine if the project as "committed" as per Market Manual 2.10. A committed project is a project that has demonstrated to the IESO a high probability of being placed into service. A project will be deemed by the IESO to be a committed project if:

(1) the connection applicant provides notification to the IESO specifying a defined and future-dated in-service date for the project, and;

(2) the connection applicant provides notification to the IESO indicating that project is actively being completed (i.e. not declared to be "on hold"), and;

(3) the connection applicant does one of the following:

- provides a notification to the IESO indicating that the connection applicant will be compensated with respect to the project through a power purchase contract, or rates set by the Ontario Energy Board,
- provides a notification to the IESO indicating that a leave to construct approval has been granted by the Ontario Energy Board,
- provides a notification to the IESO indicating that the project has a connection cost recovery agreement (CCRA) in place with the transmitter,
- provides a joint notification with the transmitter to the IESO indicating the project will come into service,
- provides notification through the IESO Facility Registration process that the project has started construction.

-End of Section-

3. Data Verification

3.1 Connection Arrangement

The connection arrangement of the project is shown in Figure 2. This arrangement is not expected to reduce the level of reliability of the integrated power system and is, therefore, acceptable to the IESO.

3.2 Connection Equipment

Table 1: 115 kV Transmission Line Data

	From Timmins to Shiningtree Jct	From Shiningtree Jct to Cote
Length	117.8 km	44 km
R	0.13075 pu	0.033344 pu
X	0.40973 pu	0.151562 pu
B	0.057143 pu	0.021826 pu
Continuous Rating (Summer/Winter)	670/780 A	1040/1200 A
LTE (Summer/Winter)	850/850 A	1266/1387 A
STE (Summer/Winter)	920/920 A	1266/1387 A*

*: The connection applicant did not provide STE ratings so it is assumed that the STE ratings will be the same as those for the LTE ratings in this study. The connection applicant will need to provide this rating during the IESO Market Registration Process.

Table 2: Main Step-Down Transformer Data

	2720-TL-0011	2720-TL-0012
Configuration	Three phase	Three phase
Transformation (kV)	120.75/13.8	120.75/13.8
Winding Configuration	Delta/Wye	Delta/Wye
Thermal Rating (MVA)	45 ONAN	45 ONAN
	60 ONAF	60 ONAF
	75 ONAF	75 ONAF
Impedance to Ground	HV: Ungrounded	HV: Ungrounded

	XV: grounded through resistance, limited to 50A for 10sec	XV: grounded through resistance, limited to 50A for 10sec
Positive Sequence Impedance	J0.075 on a 45 MVA base	J0.075 on a 45 MVA base
Under-load tap-changer	109.25 – 132.25 kV in 9 steps	109.25 – 132.25 kV in 9 steps
Off-load tap-changer	None	None

In assessing the project's equipment capability provided by the connection applicant the study results show that under an outage of one main step-down transformer the maximum flow on the companion transformer is 77.6 MVA. The connection applicant has confirmed that the main step-down transformers have a 10-day thermal rating higher than 78 MVA.

Table 3: 115 kV Circuit Breaker Specifications

Identifier	Voltage Rating	Interrupting time	Continuous Current Rating	Short Circuit Symmetrical Capability
2720-CB-0001	145 kV	50 ms	3150 A	40 kA
2720-CB-0011	145 kV	50 ms	3150 A	40 kA
2720-CB-0012	145 kV	50 ms	3150 A	40 kA

The 115 kV circuit breakers meet the maximum continuous voltage rating requirement of 138 kV. The interrupting time of the breakers meet the requirements of the TSC and the short circuit symmetrical interrupting capability of the breakers is higher than the fault levels in the area as shown in Section 4.

Table 4: 115 kV Disconnect Switch Specifications

Identifier	Voltage Rating	Continuous Current Rating	Short Circuit Symmetrical Rating
2720-DSW-0001	145 kV	1200 A	40 kA
2720-DSW-0011	145 kV	1200 A	40 kA
2720-DSW-0012	145 kV	1200 A	40 kA

The switches meet the required maximum continuous voltage and the short circuit ratings are higher than the fault levels in the area as shown in Section 4.

-End of Section-

4. Short Circuit Assessment

Fault level studies were completed by the transmitter on behalf of the IESO to examine the effects of the project on fault levels at existing transmission facilities in the surrounding area and the proposed project. Studies were performed to determine the fault levels before and after the incorporation of the project assuming that all existing and committed generators, up to the date of this assessment, were in service. The two 7 MVA synchronous condensers in the proposed project were included in this short circuit study. The short circuit study assumptions are presented in Appendix A.

Table 5 summarizes the fault levels at facilities near the project, before and after the incorporation of the project:

Table 5: Fault levels at facilities near the project

Bus	Before the Project		After the Project		Lowest Rated Circuit Breaker (kA)
	3-Phase	L-G	3-Phase	L-G	
Symmetrical Fault Current (kA)[1]					
Porcupine 500 kV	6.80	7.26	6.85	7.30	63
Porcupine 230 kV	7.34	9.42	7.37	9.44	40
Porcupine 115 kV	11.12	14.50	11.69	14.79	40
Hunta 115 kV	10.11	6.33	10.16	6.34	40
Timmins K23 115 kV	9.69	9.71	9.87	9.83	40
Timmins K1 115 kV	9.70	9.58	9.99	9.77	40
Cote Gold 115 kV	-	-	1.24	0.562	40
Asymmetrical Fault Current (kA)[1]					
Porcupine 500 kV	8.16	9.45	8.22	9.50	81.9
Porcupine 230 kV	9.57	12.88	9.61	12.93	48
Porcupine 115 kV	13.49	18.17	13.77	18.50	48
Hunta 115 kV	10.50	6.66	10.54	6.67	48
Timmins K23 115 kV	10.76	10.67	10.94	10.78	48
Timmins K1 115 kV	10.76	10.45	11.08	10.65	48
Cote Gold 115 kV	-	-	1.53	0.77	40[2]

(1): The results assume a pre-fault voltage level of 550 kV for 500 kV buses, 250 kV for 230 kV buses, and 127 kV for 115 kV buses.

(2): Assumed to be at least the same as symmetrical short circuit capability.

Table 5 shows that the interrupting capabilities of the all circuit breakers at transmission facilities in the vicinity of the project, including the project itself, are adequate for the anticipated fault levels.

– End of Section –

5. Protection Impact Assessment

A Protection Impact Assessment (PIA) was completed by the transmitter to examine the impact of the project on existing transmission system protections.

The addition of the new line T2R from Timmins TS will require new redundant protections at Timmins TS to protect the line, as well as modifications to P13T line protections at both Timmins TS and Porcupine TS. Minor modifications to P15T at Timmins TS protections will be required as well. A copy of the Protection Impact Assessment can be found in Appendix B of this report.

The transmitter must submit any protection modifications that are different from those considered in this SIA at least six (6) months before any modifications are to be implemented on the existing protection systems. If those modifications result in adverse reliability impacts, mitigation solutions must be developed.

– End of Section –

6. System Impact Studies

System impact studies were carried out to identify the effect of the project on the thermal loading of transmission circuits and system voltages for pre- and post- contingency events on the IESO-controlled grid. The impact of the project on power transfer capability measured on transmission interfaces was also studied. A line end opening study and motor starting study at the project were also performed.

6.1 Existing System

The project will be incorporated into the Timmins 115 kV area. The Timmins 115 kV area is located within the Northeast transmission zone and includes the portion of the 115 kV system bounded by the Porcupine 115 kV bus and the Hunta 115kV bus. Circuits within this area include P13T, P15T, P7G, T61S, H6T and H7T.

The loss of the 500 kV circuit P502X can result in the region of the Northeast zone bounded by Hanmer TS and Kirkland Lake TS being subjected to under-voltage, over-voltage, transient instability, relay margin violations and large frequency swings depending on system conditions. As such, there are two interfaces that aid in determining the transfer capability within this specific region: Porcupine Flow North (PFN) and Porcupine Flow South (PFS). Porcupine Flow North is defined as the active power flowing north on circuit P502X out of Hanmer TS plus the active power flowing north on circuits A8K and A9K at Ansonville TS. Porcupine Flow South is defined as the active power flowing south on P502X out of Porcupine TS and the active power flowing south on circuit D3K into Dymond TS.

Historic operation data shows that the maximum Porcupine Flow North value was about 290 MW while the maximum Porcupine Flow South value was about 1200 MW.

A simplified diagram of the Northeast Ontario power system is shown in Figure 3.

The demand in the Timmins area, defined as Timmins Area Load, is the sum of the active power flow out of Hunta SS on H6T and H7T and active power flows out of Porcupine on P13T, P15T and P7G. The loads within the Timmins Area are typically winter peaking.

Local generation in the Timmins 115 kV area consists of embedded generating stations Sandy Falls GS (5.5 MW) and Wawaitin GS (15 MW) at Timmins TS and Lower Sturgeon Falls GS (14 MW) at La Forest Road DS.

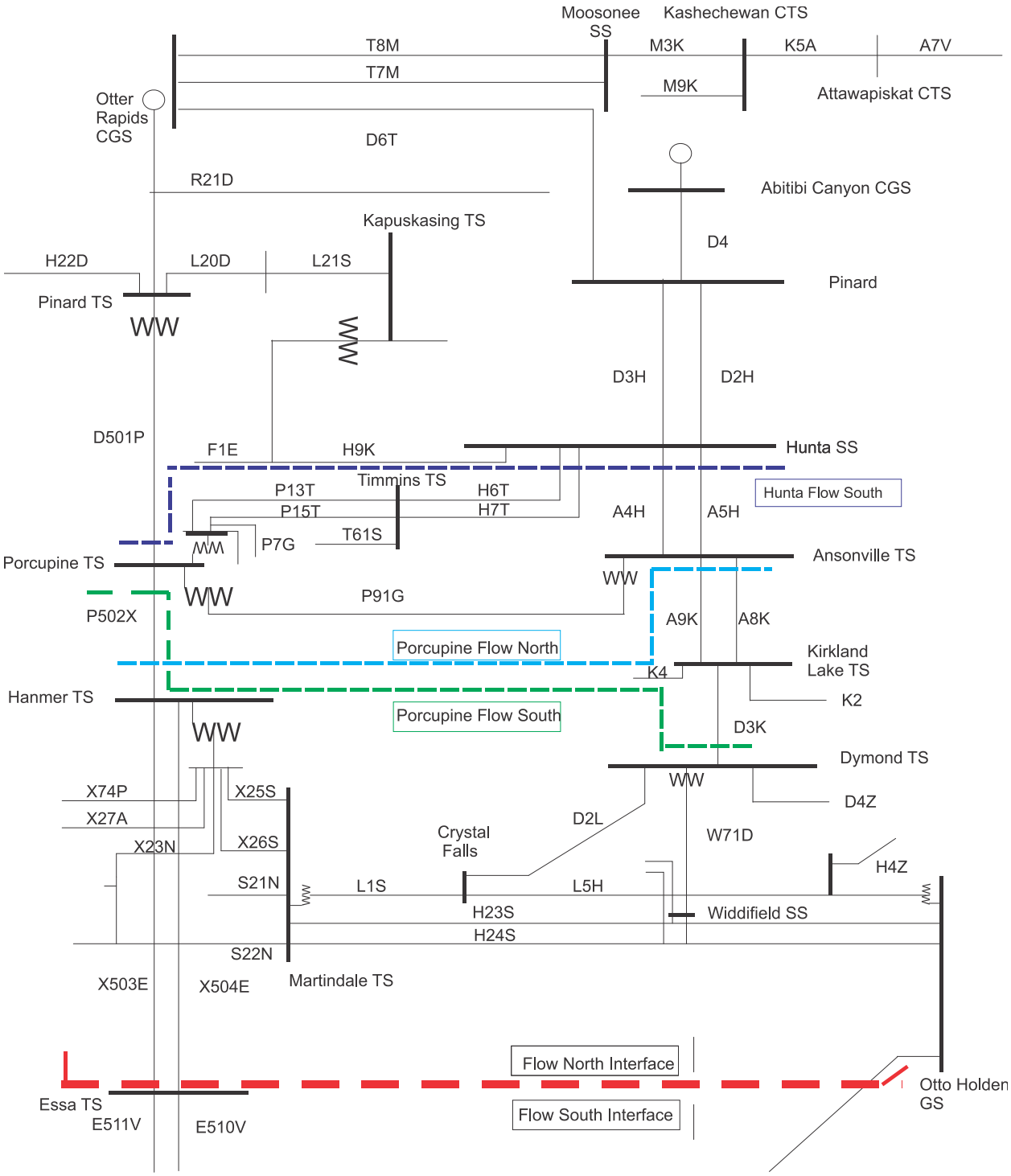

Figure 3: Simplified Diagram of the Northeast Ontario Power System

6.2 Study Assumptions

In this assessment, the following assumptions were used:

(1) **Transmission facilities**: All existing and committed major transmission facilities with 2021 in-service dates or earlier were assumed in-service.

(2) **Generation facilities:** All existing and committed major generation facilities with 2021 in-service dates or earlier were assumed in-service with the exception of Kapsukasing/Ivanhoe generation project (CAA ID 2010-394), which is currently on-hold.

(3) **Load Facilities:** All existing and committed load facilities with 2021 in-service dates or earlier were assumed in-service.

In anticipation of additional load connecting in this area, the project "Timmins West Mine CTS Expansion" (CAA 2015-542), "Bradshaw Gold Project" (CAA2016-579), "Bell Creek CTS – Load Increase" (CAA ID 2017-617) and "Ramore TS – Add new Transformer T2" (CAA 2016-582) were assumed to be in-service for this study.

(4) **Load power factor at the project:** The connection applicant confirmed that the 115 kV power factor at the project will be regulated close to 0.98 lagging as a minimum. Therefore, the power factor was set to 0.98 lagging at the 115 kV side of the project, with proposed SVCs out of service.

(5) **SVC at the project:** For this study, it was assumed that the proposed two +25/-5 Mvar SVCs were placed on each of the project's 13.8 kV buses to maintain the bus voltage at nominal voltage, 13.8 kV.

(6) **Load Forecast:** The study period covers 10 years from the in-service date of the project (2021-2031). The transmitter provided the extreme weather coincident winter peak load forecast for the Timmins area during this period as shown in Table 6 below. The load forecast for Bell Creek CTS is based on the SIA of Bell Creek CTS – Load Increase (CAA ID 2017-617).

Table 6: Winter Peak Load Forecast for Timmins 115 kV Area

Major load station	Winter Peak forecast load (MW)										
	2021	2022	2023	2024	2025	2026	2027	2028	2029	2030	2031
Bell Creek CTS	25	25	25	25	25	25	25	25	25	25	25
Gold Corp Dome CTS	20.2	20.2	20.3	20.3	20.4	20.5	20.5	20.5	20.5	20.5*	20.5*
Goldcorp Hoyle Pond CTS	11.8	11.9	11.9	11.9	12	12	12	12	12	12*	12*
Hoyle DS	8.1	8.2	8.2	8.2	8.2	8.3	8.3	8.3	8.4	8.4	8.4
Kidd Minesite CTS	28.9	29	29	29.1	29.2	29.2	29.2	29.2	29.2	29.2*	29.2*
La Forest Road DS	6.9	6.9	6.9	6.9	7.0	7.0	7.0	7.0	7.0	7.0	7.0
Timmins TS	41.2	41.3	41.3	41.4	41.5	41.6	41.6	41.7	41.8	41.8	41.9
Shiningtree DS	3.3	3.3	3.3	3.3	3.3	3.3	3.3	3.3	3.3	3.3	3.3
Weston Lake DS	4.0	4.0	4.0	4.0	4.0	4.0	4.0	4.0	4.0	4.0	4.0
Timmins West Mine CTS	13	13	13	13	13	13	13	13	13	13*	13*
Bradshaw Gold CTS	5	5	5	5	5	5	5	5	5	5*	5*
Total	**167.4**	**167.8**	**167.9**	**168.1**	**168.6**	**168.9**	**168.9**	**169**	**169.2**	**169.2**	**169.3**

*: Load forecasts from the customers could not be obtained at the time of the study so these load forecasts are based on historic data.

The summer peak load forecast was not provided by the transmitter. The assumptions used to derive the summer peak load forecast were based on the same assumptions used in the "Timmins West Mine CTS Expansion" (CAA 2015-542) as follow:

(1) The customer transformer station's (CTS) peak loads are not strongly dependent on weather conditions and therefore were assumed to be the same as the winter peak load forecast as shown in Table 6.

(2) The non CTS loads were obtained by scaling down the winter peak load forecast to 90% of the total Timmins 115 kV area peak load; consistent with historical patterns.

The summer peak load forecast is shown in Table 7.

Table 7: Summer Peak Load Forecast for Timmins 115 kV Area

Major load station	Summer Peak forecast load (MW)										
	2021	2022	2023	2024	2025	2026	2027	2028	2029	2030	2031
Bell Creek CTS	25	25	25	25	25	25	25	25	25	25	25
Gold Corp Dome CTS	20.2	20.2	20.3	20.3	20.4	20.5	20.5	20.5	20.5	20.5	20.5
Goldcorp Hoyle Pond CTS	11.8	11.9	11.9	11.9	12	12	12	12	12	12	12
Hoyle DS	7.3	7.4	7.4	7.4	7.4	7.5	7.5	7.5	7.6	7.6	7.6
Kidd Minesite CTS	28.9	29	29	29.1	29.2	29.2	29.2	29.2	29.2	29.2	29.2
La Forest Road DS	6.21	6.21	6.21	6.21	6.3	6.3	6.3	6.3	6.3	6.3	6.3
Timmins TS	37.1	37.2	37.2	37.3	37.4	37.4	37.4	37.5	37.6	37.6	37.7
Shiningtree DS	3.0	3.0	3.0	3.0	3.0	3.0	3.0	3.0	3.0	3.0	3.0
Weston Lake DS	3.6	3.6	3.6	3.6	3.6	3.6	3.6	3.6	3.6	3.6	3.6
Timmins West Mine CTS	13	13	13	13	13	13	13	13	13	13	13
Bradshaw Gold CTS	5	5	5	5	5	5	5	5	5	5	5
Total	**161.1**	**161.4**	**161.5**	**161.7**	**162.2**	**162.5**	**162.5**	**162.6**	**162.8**	**162.8**	**162.8**

(7) **Voltages:** All 115 kV buses within the Northeast zone must respect pre- and post-contingency maximum voltage levels as per the ORTAC with the exception of those buses at the stations shown in Table 8.

The maximum voltage levels at these stations have been provided by the transmitter. The pre-contingency minimum voltage levels at these stations ensure that transfer limits within the Northeast zone are respected.

Table 8: Voltage Ranges for Specific 115 kV buses in the Northeast Zone

Station	Minimum Voltage (kV)	Maximum Voltage (kV)
Abitibi Canyon SS	125	138
Ansonville TS	120	127
Hunta SS	123	138
Kapuskasing TS	113	130
Porcupine TS	125	135
Timmins TS	125	138

(8) **Base Cases:** Since the peak flow south typically occurs during summer conditions and the peak flow north occurs during winter conditions, two base cases were developed corresponding to the winter and summer load conditions and interface transfers. These two cases were used for both thermal and voltage studies.

Winter peak load case

- A Northeast demand of 1,665 MW was assumed, based on the IESO extreme weather winter peak load forecast for the year 2031
- Load level in the Timmins 115 kV area was set to the 2031 winter peak load forecast as shown in Table 6
- PFN interface transfer of 320 MW
- Loads were modeled as constant MVA unless otherwise specified
- A 0.90 lagging power factor was assumed for the loads at all stations in the area unless otherwise specified

Constrained summer peak load case

As indicated in "Timmins West Mine CTS Expansion" (CAA 2015-542) and "Bradshaw Gold Project" (CAA2016-579) SIAs, congestion becomes an issue with heavy flow south on 115 kV circuits H6T and H7T under high generation conditions. As such, an interface, Hunta Flow South (HFS) was defined to monitor the active power flowing south on H6T/H7T and A4H/A5H out of Hunta SS and the active power flowing south on circuit D501P into Porcupine TS. The new defined interface is shown in Figure 3.

To mitigate the overload condition on H6T/H7T, generation within the Northeast zone, i.e. Abitibi Canyon G2 was curtailed. As such, an additional constrained case, called "the constrained summer peak load case", was created to perform the post-contingency analysis with the following attributes:

- A Northeast demand of 1,150 MW, based on the IESO extreme weather summer peak load forecast for the year 2031
- The load level in the Timmins 115 kV area was set to the 2031 summer peak load forecast as shown in Table 7
- The flow on the HFS interface was set to a maximum of 1270 MW corresponding to H7T reaching its continuous rating
- The PFS interface was set to a transfer of 1320 MW
- Loads were modeled as constant MVA unless otherwise specified
- Loads at all stations were set to a power factor of 0.90 in the area unless otherwise specified

6.3 Contingencies

The contingencies simulated in this assessment are in accordance with NERC TPL-001-4 and the ORTAC.

All single element and common tower contingencies in the Timmins 115 kV area were tested. Breaker failure contingencies at Hunta SS, Timmins TS and Porcupine TS were also tested. Finally, under outage conditions, contingencies that would result in additional loading on circuits in the Timmins 115 kV area

were also tested. Table 9 lists all the contingencies simulated for thermal and voltage analyses. It should be noted that any contingency involving P13T results in tripping T2R due to the connection configuration.

Table 9: List of Simulated Contingencies

Contingency	Contingency element(s)
N-1	H6T, H7T, P13T, P15T, P91G, A4H, A5H, Porcupine T3, Porcupine T4
N-2 (tower contingencies or breaker failure)	P13T+P15T H6T+H7T A4H+A5H T2R+T61S Hunta L3L7 BF (Loss of H7T+D3H) Hunta L4L7 BF (Loss of A4H+L8L+H7T) Timmins K3H7T BF (Loss of H7T+P15T+P7G+T61S) Porcupine K1K4 BF (Loss of Porcupine T4, P15T, P7G,T61S)
N-1-1 (outage + contingency)	Porcupine K2K3 + Porcupine K3K4 IBO Hunta L4L6 + Hunta L5L6 IBO Hunta L4L7 + Hunta L3L7 IBO Porcupine T3 + Porcupine T4 P13T + P15T P15T + H6T P13T + H7T H6T + H7T

6.4 Additional Study Assumptions

6.4.1 Northeast Load and Generation Rejection (NE LGR) Scheme

The Northeast Load and Generation Rejection (NE LGR) Scheme, is a Special Protection Scheme (SPS) which trips loads and generation upon detecting certain contingencies within the Northeastern zone of the IESO-Controlled Grid. This scheme was used in this study to manage thermal and voltage concerns following contingencies.

The NE LGR matrix is shown in Table 10. A subset of the NE LGR Scheme matrix that pertains to the Timmins Area Load region is highlighted in grey.

Table 10: Northeast Load and Generation Rejection Scheme Matrix

Control Action	Contingencies																
	D501P	P502X	P91G	L20D/L21S	D2H	D3H	A4H	A5H	A4H+A5H	H6T/P13T	H7T/P15T	H6T+H7T	H9K	Porcupine T3	Porcupine T4	Ansonville T2	Ansonville H1L91 IBO
Reject Abitibi Canyon G2	X	X	X		X	X	X	X	X	X	X	X					
Reject Abitibi Canyon G3	X	X	X		X	X	X	X	X	X	X	X					
Reject TCPL Kapuskasing NUG	X	X		X									X				
Reject Nagagami & Shekak NUG	X	X	X	X									X				
Reject Calstock NUG	X	X	X	X						X	X	X	X				
Reject Long Sault Rapids NUG		X	X					X		X	X	X				X	X
Reject Cochrane Power NUG		X	X				X	X	X	X	X	X				X	X
Reject Tunis NUG		X	X				X			X	X	X				X	X
Reject Iroquois Falls Power CGS G1		X					X	X	X	X	X	X					
Reject Iroquois Falls Power CGS G3		X	X				X	X	X	X	X	X					
Reject Iroquois Falls Power CGS – all		X	X				X	X	X	X	X	X					
Reject NP Kirkland Lake NUG G6		X															
Trip H2O Power Iroquois Falls CTS		X	X				X	X	X	X	X	X					
Trip TMP load at SF Inc.				X													
Trip TMP load at SP Inc.		X															
Trip TMP load at SF Inc.	X																
Trip P7G, P15T, T61S	X	X												X	X		
Trip 27.6 kV breakers at Timmins	X	X												X	X		
Trip H7T	X	X												X	X		
Trip L21S/K38S	X	X		X													
Open A8K and A9K at Ansonville		X															
Open H9K at Hunta	X	X		X													
Trip P91G	X	X	X														

Trip Detour Gold Sag and Ball #1	X	X															
Trip Detour Gold Sag and Ball #2	X	X															
Trip Entire Detour Gold Facility	X	X															
Trip Northland Power Solar Farms		X	X			X	X	X	X	X	X	X				X	X

6.4.2 Proposed Tie Switch at Timmins TS

During an outage of P13T, circuits T2R and H6T are connected radially to Hunta SS and the load at the proposed project cannot be supplied due to voltage collapse. It can be mitigated by installing a normally open tie switch between the two Timmins 115 kV buses and closing the switch during an outage of P13T.

Simulation results show the current on the tie switch can be up to 370 A when it is closed during an outage of P13T. The transmitter confirmed they will install a normally open load interrupting switch between the two Timmins 115 kV buses and close the switch during an outage of P13T to maintain Timmins TS voltage above its pre-contingency minimum voltage.

In this study it is assumed that there is a tie switch between the two Timmins 115 kV buses closed for an outage of P13T. Figure 4 shows simplified Timmins 115 kV system with the proposed tie switch.

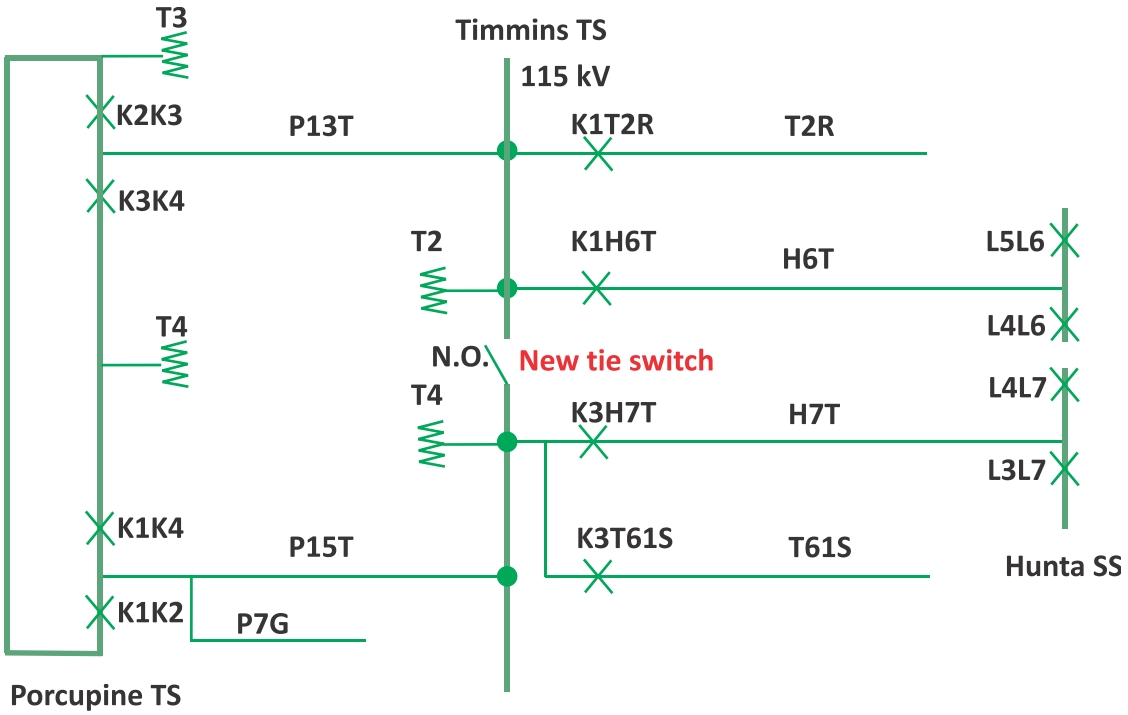

Figure 4: Simplified Diagram of Timmins 115 kV System with the Proposed Tie Switch

6.5 Thermal Analysis

The ORTAC specifies the following criteria for thermal loading of transmission facilities:

(1) Continuous ratings are used for pre-contingency equipment loading with all planned transmission facilities in-service,

(2) Long-term emergency (LTE) ratings are used with any one element out of service (planned or unplanned), and

(3) Short-term emergency (STE) ratings are used with more than one element out of service (unplanned).

Where circuits and transformers may be loaded up to their STE ratings, system adjustments must be available to reduce their loading to within the LTE ratings within the time afforded by their STE ratings.

Thermal analysis was performed to ensure that the local transmission system meets the criteria prescribed by the ORTAC after the project is incorporated. Table 11 lists the thermal ratings of the monitored circuits and transformers. The ratings were provided by the transmitter with the exception of the ratings for T2R from Shiningtree to the project. Those ratings were provided by the connection applicant.

Table 11: Circuit Section and Transformer Ratings

	From	To	Rating (A)					
			Continuous[3]		LTE[3]		STE[3]	
			Summer[1]	Winter[2]	Summer[1]	Winter[2]	Summer[1]	Winter[2]
H6T	Hunta SS	Bradshaw junction	500	580	530	610	530	610
	Bradshaw junction	Tisdale junction	500	580	530	610	530	610
	Tisdale junction	Laforest Road junction	500	580	530	610	530	610
	Laforest Road junction	Timmins TS	500	580	530	610	530	610
H7T	Hunta SS	Warkus junction	500	580	530	610	530	610
	Warkus junction	Timmins TS	500	580	530	610	530	610
P91G	Erg Resources junction	Porcupine TS	1120	1300	1440	1580	1680	1800
	Hoyle junction	Erg Resources junction	1120	1300	1440	1580	1680	1800
	Ansonville junction	Hoyle junction	1120	1300	1440	1580	1650	1780
	Ansonville TS	Ansonville junction	1120	1300	1440	1580	1650	1780
P13T	Porcupine TS	Timmins TS	890	1030	1060	1180	1150	1260
P15T	Porcupine TS	Timmins TS	890	1030	1140	1250	1250	1360
T2R	Timmins TS	Shiningtree junction	670	780	850	850	920	920
	Shiningtree junction	Cote Gold Project	1040	1200	1266	1387	1266	1387
T2	Ansonville TS (115 kV)	Ansonville TS (230 kV)	125	125	260.3	267	267 1	267
T3	Porcupine TS (500 kV)	Porcupine TS (115 kV) Porcupine TS (27.6 kV)	225	225	225	246	332.8	374.6
T4	Porcupine TS (500 kV)	Porcupine TS (115 kV) Porcupine TS (27.6 kV)	225	225	225	246	332.8	374.6

Notes: (1) Summer ambient conditions: 30°C temperature, 4 km/h wind speed, daytime
(2) Winter ambient conditions: 10°C temperature, 4 km/h wind speed, daytime
(3) Continuous: Rating calculated at the lesser conductor temperature of 93°C or sag temperature
Long term emergency: Rating calculated at lesser conductor temperature of 127°C or sag temperature
Short term emergency: Rating calculated at the sag temperature with a pre-contingency loading of 100% of the continuous rating
For transformers LTE and STE mean 10-day and 15-minute thermal ratings, respectively.

6.5.1 Winter Peak Load Case

For all studies using the winter peak load case with high PFN transfer, no thermal violations occurred on the monitored elements pre- and post-contingency. However, for the loss of Porcupine transformer T3 or T4, the remaining transformer loading becomes 105% of the transformer's continuous rating which corresponds to 96% of the transformer's winter 10-day LTE.

6.5.2 Constrained Summer Peak Load Case

Power transfer capabilities on Hunta Flow South interface before and after the proposed project were studied. It was found that the power transfer capability on this interface decreases 1.3% which is less than 5%, meeting the ORTAC requirement.

Loss of one element (N-1) and Loss of two elements (N-2)

For studies with all elements in-service, loss of one element (N-1) and loss of two elements (N-2) using the constrained summer peak load case, results show that all post-contingency loadings were within their LTE ratings for the loss of one element.

Loss of one element under outage condition (N-1-1)

For the constrained summer peak load case, an outage of Hunta L4L6 followed by an L5L6 IBO results in the H6T line end opening at Hunta and the loading on H7T above its LTE ratings. Similarly, H6T is overloaded during an outage of L4L7 followed by an L3L7 IBO. These are existing issues and the proposed project makes the overloading conditions worse. The overloading results are shown in Table 12. The issue can be managed by curtailing the generation output during the outage of the aforementioned breakers.

Currently, detection logic in the NE LGR scheme for contingencies involving H6T or H7T is defined as breaker K1H6T or K3H7T open at Timmins. It is recommended that the transmitter include the opening of Hunta SS 115 kV breakers L4L6+L5L6 and L3L7+L4L7 as part of the detection logic for circuits H6T and H7T, respectively, to mitigate the overload issues described above.

Table 12: Post-contingency load flow (L4L6/L3L7 O/S and L5L6/L4L7 IBO)

Element	Circuit Section		LTE	L4L6 O/S	L3L7 O/S
	From	To	A	L5L6 IBO	L4L7 IBO
P13T	PORCUPINE	TIMMINS	1150	38.90%	38.00%
P15T	PORCUPINE	TIMMINS	1250	39.80%	13.00%
H6T	TIMMINS	LAFOREST_RDJ	530	0.00%	122.90%
	LAFOREST_RD	TISDALE_J	530	0.00%	126.40%
	TISDALE_J	BRADSHAW_JT	530	0.00%	126.50%
	BRADSHAW_J	HUNTA_SS	530	0.00%	130.40%
H7T	TIMMINS	WARKUS_J	530	115.10%	0.00%
	WARKUS_J	HUNTA_SS	530	132.50%	0.00%
P91G	PORCUPINE	ERG_RES	1680	36.40%	36.60%

	ERG_RES_J	HOYLE	1680	36.40%	36.60%
	HOYLE_J	ANSON	1650	36.90%	37.00%
T2R	TIMMINS	SHINGTR	920	40.20%	40.50%
	SHINGTR	COTE GOLD	1266	29.10%	29.20%

6.6 Voltage Analysis

Sections 4.2 and 4.3 of the ORTAC state that with all facilities in-service pre-contingency, the following criteria shall be satisfied:

- The pre-contingency voltages on 500 kV buses must not be less than 490 kV and no greater than 550 kV, 230 kV buses must not be less than 220 kV and no greater than 250 kV and 115kV buses must not be less than 113 kV and no greater than 127 kV;
- The post-contingency voltages on 500 kV buses must not be less than 470 kV and no greater than 550 kV, 230 kV buses must not be less than 207 kV and no greater than 250 kV and 115 kV buses must not be less than 108 kV and no greater than 127 kV; and
- The voltage change following a contingency must not exceed 10% pre-ULTC and 10% post-ULTC on 500 kV, 230 kV and 115 kV buses.

The voltage performance of the IESO-controlled grid was evaluated by examining if pre- and post-contingency voltage levels and post-contingency voltage declines remain within criteria prescribed by the ORTAC at stations in the vicinity of the project. Table 13 lists the buses that were monitored.

Table 13: List of Monitored Buses

Monitored Buses
Porcupine TS 500 kV
Porcupine TS 230 kV
Porcupine 115 kV
Ansonville TS 230 kV
Ansonville TS 115 kV
Hunta SS 115 kV
Timmins K1 115 kV
Timmins K3 115 kV
Shiningtree T61S 115 kV
Shiningtree T2R 115 kV
Project 115 kV
Project 13.8 kV

Studies indicated that with the two proposed +25/-5 Mvar SVCs in-service, the pre-contingency voltages can be maintained above the minimum requirements by the ORTAC.

In the winter and summer constrained base cases the loss of the proposed SVC(s) results in the post-contingency voltage at the project's 115 kV bus below the 108 kV minimum required by the ORTAC. To mitigate this issue, the connection applicant is proposing to implement a load rejection scheme that rejects the project's load upon the loss of the SVC(s).

The connection applicant is required to provide a detailed description of the load shedding scheme during the Market Registration process.

As per Section 6.4, the proposed 115 kV normally open bus tie switch at Timmins TS is assumed closed during outage of P13T in this study.

6.6.1 Winter Peak Load Case

Loss of one element (N-1) and Loss of two elements (N-2)

For studies with all elements in-service, loss of one element (N-1) and loss of two elements (N-2) using the winter peak load case with high PFN transfer, the voltages at monitored buses in

Table 13 were found to be within criteria.

Loss of one element under outage condition (N-1-1)

For the loss of both circuit breakers K2K3 and K3K4 at Porcupine TS, circuits P13T and T2R are connected radially to Hunta TS through H6T which results in voltage collapse at the proposed project.

Furthermore, under an outage of Porcupine T3, a Porcupine T4 contingency results in voltage collapse at the proposed project.

To address the above issues, the transmitter is required to implement an SPS to trip the proposed project upon the loss of both circuit breakers K2K3 and K3K4 or the loss of T3 and T4 at Porcupine. Details on SPS implementation are given in Section 6.10.

Under an outage of P13T, a P15T contingency results in the loss of Timmins T2 and T4, T2R, T61S and P7G. The post-contingency voltage at the Porcupine 500 kV bus is about 553 kV as shown in Table 14. The maximum post-contingency voltage at Porcupine 500 kV bus as specified by the owner is permitted to be as high as 555 kV. Therefore, there is no concern.

Table 14: Voltage Results for P13T O/S and Loss of P15T

Bus Name	Base kV	Pre Cont	Loss of P15T_P13T OS			
			Pre ULTC		Post ULTC	
		Volt kV	Volt kV	% Change	Volt kV	% Change
PORCUPINE_TS500.00	500	534.4	552.6	3.4%	553.1	3.5%
PORCUPINE_TS220.00	220	242.0	249.2	3.0%	242.5	0.2%
PORCUPINE_TS118.05	118.05	128.7	136.9	6.4%	132.4	2.9%
ANSONVILLE 220.00	220	245.4	250.4	2.1%	245.3	0.0%
ANSONVILLE 118.05	118.05	122.8	124.1	1.1%	122.3	-0.4%
HUNTA_SS 118.05	118.05	128.3	128.0	-0.2%	126.8	-1.2%
TIMMINS_K1H6118.05	118.05	127.6	0.0	-	0.0	-
TIMMINS_K23 118.05	118.05	127.6	0.0	-	0.0	-
SHINGTR_T61S118.05	118.05	127.6	0.0	-	0.0	-
SHINGTR_T2R 118.10	118.1	118.2	0.0	-	0.0	-
COTEGOLD 118.10	118.1	118.3	0.0	-	0.0	-
COTE_T1 13.800	13.8	13.8	0.0	-	0.0	-

6.6.2 Constrained Summer Peak Load Case

For studies with all elements in-service, loss of one element (N-1) and loss of two elements (N-2) using the constrained summer peak load case, the voltages at monitored buses in Table 13 were found to be within criteria.

For the loss of one element under outage conditions, the same issues were identified as those found in the winter peak load case study and the same solutions proposed in Section 6.10 will address these issues.

6.7 Line End Opening Study

Simulations were performed to investigate potential high voltage at the project resulting from the charging of the 115 kV T2R circuit with the line end opened at the project. The voltage at Timmins was set to its maximum continuous voltage of 138 kV as indicated in Table 8. Simulation results showed that the voltage at the end of T2R is 141.2 kV when energized with no load present. This is about 3 kV higher than the maximum continuous voltage allowed at Timmins. Further simulation showed that to avoid

exceeding 138 kV on equipment connected to circuit T2R, a 6 Mvar reactor rated at 138 kV must be installed at the project's 115 kV bus. The reactor must be on for energizing the T2R circuit and off when the load at the proposed project is in service. The simulation results are shown in Table 15 below.

Table 15: Line End Opening Study Results

	Timmins (kV)	Shiningtree Jct (kV)	Cote Gold (kV)
Line end opening	138	141.0	141.2
6 Mvar Reactor at project	138	137.5	136.5

6.8 Motor Starting Study

The Motor start study was performed on the largest Direct On-Line (DOL) motor. The largest DOL motor at the facility is 800 HP. It was assumed to have 6.5 times full load motor current at 0.2 pf. The load was assumed to be 50 MW when one of the 800 HP motors is starting. The proposed two +25/-5 Mvar SVCs were assumed in-service during motor start.

The motor start study results are shown in Table 16.

Table 16: Motor Start Study Results

	Pre-Start (kV)	Post-Starting (kV)	Voltage Dip (%)
115 kV bus	125.7	122.7	-2.38
13.8 kV bus	13.9	13.4	-3.59

The voltage flicker criteria as per Appendix 2 of the Transmission System Code states that a voltage flicker should be limited to 3% for switching operations performed 4 times per day. A higher voltage change may be acceptable for infrequent motor starts. It was assumed that motors at the proposed project would start only once per day and hence a voltage change limited to 4% was deemed acceptable. For more frequent starts, a more stringent voltage criteria would be applied.

6.9 Total Load Tripped by Configuration Assessment

As per 7.1 Load Security Criteria specified in ORTAC, the maximum load interrupted by configuration should not exceed 150 MW and 600 MW for the loss of one element and two elements, respectively.

To assess these criteria after the incorporation of the project, the total amount of load tripped by configuration for the loss of one or two elements involving the project was examined.

Loss of one element: Based on the winter peak load forecast, a maximum of 72 MW could be interrupted for the loss of one element (loss of T2R) with the project incorporated. The total load lost is within the criteria.

Loss of two elements: Under an outage of P13T, a contingency involving P15T results in the loss of Timmins T2 and T4, and circuits T2R, T61S and P7G. Based on the winter peak load forecast, a

maximum of 205 MW could be interrupted. With the project incorporated, the total load lost is within the criteria.

6.10 Special Protection Scheme

The Northeast Load and Generation Rejection (NE LGR) scheme, currently classified as NPCC type III, was installed to increase the transfer capability in the NE zone during outages to 500 and 230 kV circuits. This is done by cross tripping certain 115 kV circuits and rejecting specific generation and loads. Customers participating in the load rejection function of the NE LGR scheme are exposed to a higher risk of interruption than other customers in the NE zone.

Adding new load to the NE zone increases the likelihood of arming the NE LGR scheme. To ensure that the customers already participating in the load rejection function of this scheme will not be exposed to additional risk as a result of the project, the project must participate in the load rejection portion of the NE LGR scheme or participate in a local load rejection scheme.

According to the results from this SIA study, the proposed project should be rejected for the loss of 500 kV circuits D501P, P502X, Porcupine autotransformer T3 or T4, and opening of K2K3 and K3K4 at Porcupine TS. There are two options to implement rejection for the proposed project: (a) Expanding the existing NE LGR scheme to include rejecting the proposed project, provided that the expanded SPS remains as Type III SPS; or (b) Creating a new Cote Gold SPS. The proposed SPS selection matrix for rejecting the proposed project is shown in Table 17.

Table 17: SPS Selectivity requirements for options (a) and (b)

Control Actions	Contingencies				
	D501P	P502X	Porcupine T3	Porcupine T4	K2K3 and K3K4) at Porcupine
Trip Cote Gold breaker(s)	X	X	X	X	X

The final decision on the option chosen for rejection will depend on further investigation and study by the IESO and the transmitter.

Based on the study results, it is not expected that the failure of either option will result in an adverse impact on Ontario's interconnections. Therefore, it is expected that if option (a) is chosen the NE LGR scheme will remain NPCC type III. If option (b) is chosen the new SPS will also be classified as NPCC type III. However, as required in ORTAC, an SPS proposed in a connection assessment must have full redundancy and separation of the communication channels, and must satisfy the requirements of the NPCC Type I SPS criteria. This means special protection system facilities must be installed at the project to accept a single pair (A & B) of L/R signals, and disconnect the project from the IESO-controlled grid with no intentional time delay when armed following specific contingencies. The special protection system facilities at the project must be built as Type I special protection systems to the extent possible.

If option (b) is chosen, it's recommended that all of the existing functionalities of the NE LGR that are specific to the Timmins area be transferred to the proposed SPS. The transmitter will need to ensure that operation of all transferred functionalities do not take longer in the new scheme as compared to the NE LGR scheme.

A matrix of the recommended SPS is shown in Table 18.

Table 18: Recommended SPS Matrix

Control Actions	Contingencies				
	D501P	P502X	Porcupine T3	Porcupine T4	K2K3 and K3K4) at Porcupine
Trip P7G, P15T, T61S	X	X	X	X	
Trip 27.6 kV breakers at Timmins	X	X	X	X	
Trip H7T	X	X	X	X	
Trip Cote Gold breaker(s)	X	X	X	X	X

-End of Section-

Appendix A: Assumptions for short circuit study

Assumptions for Short Circuit Study

1) Existing Generation Facilities

Northwest				
Name	**Units/Capacity**		**Name**	**Units/Capacity**
Atikokan TGS	G1		Caribou Falls	G1-G3
Thunder Bay	GS2-GS3		Ear Falls	G1-G4
West Coast	G2		Kenora GS	G1-G10
Greenwich Wind	98.9 MW		Manitou Falls	G1-G5
Terrace Bay Pulp	STG1		Norman GS	G1-G5
Umbatta Falls	G1-G2		Pine Portage	G1-G4
Murillo_DSB1	G1-G4		Silver Falls	G1
Aguasabon	G1-G2		Sturgeon Falls	G1-G2
Alexander GS	G1-G5		Whitedog Falls	G1-G3
Wawatay	G1-G3		Valerie Falls	G1-G2
Calm Lake	G1-G2		Lac seul GS	G1
Cameron Falls	G1-G7		Atlantic Power Nipigon	G1-G2
ResFP Kraft and ResFP Thunderbay	G3, G5, G6		Lower White River CGS	G1-G3
			Upper White River CGS	G1-G3

Northeast				
Name	**Units/Capacity**		**Name**	**Units/Capacity**
Iroquois Falls Power CGS	101, 102, 103		Serpent CGS	G1-G2
H2O Power Iroquois Falls	G4		Wells GS	G1-G2

Northland Power Kirkland Lake CGS	G1-G6		Wawaitin GS	G1-G2
Coniston	G1-G3		Domtar Espanola	G1, G2, G5
Atlantic Power Calstock	G1		Tembec (Mallete Kraft)	G1-G2
Atlantic Power North Bay	G1, G2		Nagagami&Shekak	G1-G2
Hound_chuteg	G1-G2		Long Sault	G1-G4
Sandy Falls	G1		High Falls	G1-G2
Lower sturgen	G1-G2		Rayner	G1-G2
Aubrey Falls	G1-G2		Red Rock Falls	G1-G2
Aux Sauble GS	G1		Atlantic Power Kapuskasing	G1-G2
Abitibi Canyon GS	G1-G5		Atlantic Power Tunis	G1-G2
Carmich Falls	G1-G2		Harmon	G1-G2
Crystal Falls	G1-G4		Otto Holden GS	G1-G8
Lower Notch	G1-G2		Kipling GS	G1-G2
Otter Rapids	G1-G4		Little Long GS	G1-G2
Cochrane Power CGS	G1, G2		Mcleans Mountain WGS	59.4 MW
Liskeard Solar	30 MW		Abitibi CGS	10 MW
Lower Mattagami Expansion			Martins Meadows CGS	10 MW
Empire CGS	10 MW		Long Lake CGS	10 MW
Smoky Falls 2 GS	G1-G3			

Essa				
Name	**Units/Capacity**		**Name**	**Units/Capacity**
York Energy Centre	G1, G2		Des Joachims	G1-G8

Toronto				
Name	**Units/Capacity**		**Name**	**Units/Capacity**
Pickering units	G1, G4-G8		Sithe Goreway	G11-13, G15
Darlington	G1-G4		TransAlta Douglas	G1-G3
Portlands GS	G1-G3		GTAA	G1-G3
Algonquin Power (Embedded under Bramalea TS)	G1, G2		Brock west	G1
Whitby Cogen	G1			

Northeast/GLP				
Name	**Units/Capacity**		**Name**	**Units/Capacity**
Lake Superior Power	GTG1, GTG2, STG1		Holingsworth	G1
Prince I & II WGS	198 MW		McPhail	G1-G2
Clergue	G1-G3		Scott	G1-G2
Algoma Steel	103 MW EG		Mission Falls	G1
Gartshore	G1		Harris GS	G1
Hogg	G1		Steep Hill Falls	G1
Andrews GS	G1-G3		Mackay GS	G1-G3
GOULAIS WGS	25 MW		Bow Lake CGS	20 MW
Bow Lake 2 CGS	40 MW			

2) Committed Transmission Connected Generation Projects

Without SIA/CIA application

Zone	Project Name	Proposed Size	Connection Point	Gen Type
East	Barlow Solar Energy Centre	10	ST LAWRENCE TS	**Distribution**
Ottawa	Pendleton Solar Energy Centre	12	WENDOVER DS	**Distribution**

Essa	Sky One (Solar)	11.76	MUSKOKA TS	**Distribution**

With SIA/CIA application

Zone	6.10.127 Project Name	CAA ID	Generation Type	Capacity	I/S Date
Northeast	Yellow Falls (previously called Island Falls)	2004-155	Hydroelectric	16.4MW	2017/9/30
	Kabinakagami Generation Development	2010-389	Hydroelectric	26MW	Unknown
	New Post Creek GS (Peter Sutherland Sr GS)	2007-294	Hydroelectric	28.8MW	2017/04/01
	Smooth Rock Falls GS (Mallette Kraft CGS)	2014-518	Hydroelectric	9.2 MW	2016/12/30
Northwest	Wawatay G4	2004-130	Hydroelectric	7MW	2019/1/1
	Trout Lake River Small Hydro Project	2010-390	Hydroelectric	3.75MW	2017/2/28
	Namewaminikan Hydro project	2010-393	Hydroelectric	6.4MW	2017/05/31

3) Load Projects or Customer's synchronous motors or generators

Existing Stations with Synchronous Motors or Generators

Zone	*Station*	Voltage (kV)	MVA
Northwest	Domtar Dryden CTS	13.2	20.65
	Dryden Weyerhauser	13.2	41.9
	Fort Francis TS	13.8	35.05
	Kenora	6.6	80
	Kenora CGS	2.4	12.5
	Lac Des Iles Mine (Syn. Motors)	4.16	23.8
	Marathon Pulp CTS (Syn. Motors)	4.16	1.9
	Murillo DS	25	28.6
	Norman CGS	6.6	16.5
	ResFD Kraft CTS	13.8	38
	ResFD Thunder Bay CTS	4.16	19
		13.8	230.46
Northeast	Espanola TS	44	11.62
	Tembec Kapuskas CTS	13.8	47.74

	Tembec Spruce Falls	13.8	23.87
		6.6	100.71
	Cote Gold	13.8	14

Existing Station with Transformer configuration of Yg/Δ or Yg/Yg/Δ

Zone	Project Name	CAA ID	Transformer
Northeast	Detour Lake 230 kV	2009-359	T1, T2, T3

Committed Stations with Synchronous Motors or Generators

Zone	Project Name with Connected Station	CAA ID	Voltage (kV)	MVA
Northwest	Marathon PGM (Syn. Motors)	2012-476	13.8	30.6
	Esker CTS - Synchronize Diesel Generators	2016-EX841	4.16	9.12
Northeast	Upper Beaver Mine and Mill Complex (Syn. Motors)	2012-482	25	22.22
Northeast	Domtar Espanola CGS	2015-558	13.8	30 MW

Committed Stations with Transformer configuration of Yg/Δ or Yg/Yg/Δ

Zone	Project Name	CAA ID	Transformer
Northwest	Rainy River	2013-502	T1, T2
Northeast	New Hanmer Load Station	2016-560	T1, T2

Committed Stations with Synchronous Motors and Transformer configuration of Yg/Δ or Yg/Yg/Δ

Zone	Project Name	CAA ID	Voltage (kV)	MVA	Transformer
Northwest	Osisko Hammond Reef Gold Mine	2012-470	27.6	44	T1, T2

4) Transmission System Upgrades

Zone	Project Name	CAA ID	Descriptions
Northwest	TransCanada Energy East	2013-492	Connecting 2 new circuits between: M2D and S1C, A4L and M2W.
	Ontario 230 kV East-West Tie	2016-568	Connecting new 230 kV circuits M37L and M38L between Lakehead TS and Marathon TS; 230 kV circuits W35M and W36M between Marathon TS and

			Wawa TS.
	Wataynikanepay Transmission	2016-567	To build a new 230 kV transmission line between the 230 kV circuit D26A, and the 115 kV circuit E1C.
Toronto	Clarington TS	2012-462	500/230kV switching and transformer station to be established at the existing Oshawa Area Junction on the Bowmanville TS by Cherrywood TS transmission line corridor
	Runnymede TS (KxW upgrade) project	2016-571	New DESN along with upgrading K1W, K3W, K11W and K12W
Essa	Barrie Area Reinforcement project	2016-580	Uprate E3/4B to 230 kV circuits and rebuild Barrie TS

Appendix B: PIA Report

Hydro One Networks Inc.
483 Bay Street
Toronto, Ontario
M5G 2P5

PROTECTION IMPACT ASSESSMENT

IAMGOLD – COTE LAKE MINE CONNECTION R1

SUMMARY

PCT – 925

Date: February 21, 2018

COPYRIGHT © HYDRO ONE NETWORKS INC. ALL RIGHTS RESERVED

Disclaimer

This Protection Impact Assessment has been prepared solely for the IESO for the purpose of assisting the IESO in preparing the System Impact Assessment for connection of the proposed transmission facilities to the IESO–controlled grid. This report has not been prepared for any other purpose and should not be used or relied upon by any person for any other purpose.

This Protection Impact Assessment was prepared based on information available to Hydro One at the time the assessment was carried out. It is intended to highlight significant impacts, if any, to affected transmission protections early in the project development process. The results of this Protection Impact Assessment are also subject to change to accommodate the requirements of the IESO and other regulatory or legal requirements. In addition, further issues or concerns may be identified by Hydro One during the detailed design phase that may require changes to equipment characteristics and/or configuration to ensure compliance with the Transmission System Code legal requirements, and any applicable reliability standards, or to accommodate any changes to the IESO-controlled grid that may have occurred in the meantime.

Hydro One shall not be liable to any third party, which uses the results of the Protection Impact Assessment under any circumstances, whether any of the said liability, loss or damages arises in contract, tort or otherwise.

Revision History

Revision	Date	Change
R0		Initial Release
R1	21/02/18	Change of configuration; addition of bus tie device

PIA – IAMGOLD – COTE LAKE MINE CONNECTION Revision: R1

1 INTRODUCTION

1.1 GENERAL

This PIA study is prepared for the IESO to assess the potential impact of the proposed wind connections from National Rise to the existing transmission protections. The primary focus of this study is to protect Hydro One system equipment while meeting IESO's System Reliability Criteria.

2 DESCRIPTION OF EXISTING AND PROPOSED RECONFIGURATION

Iamgold Corp will be developing a 72MW gold mine located 25km southwest of Gogama, Ontario. To supply this new mine, the idle T2R circuit will be re-energized at 115kV from Timmins TS to Shiningtree junction (approximately 115km in length). A new 44km circuit will then be built from Shiningtree JCT to the customer substation which will be constructed and owned by the proponent (Iamgold). In addition, a new station termination will be required at Timmins TS to accommodate the new T2R circuit in the 115kV yard.

A load break bus tie switch will be added between P13T and P15T. This will allow either line to supply the connecting lines at Timmins should either P13T or P15T be out of service. In order to maintain appropriate line zoning a freestanding CT with 4 cores will be required to be installed at the point of bus connection.

Note: The new 44km line from Shiningtree x Customer CTS will be built, and owned by the customer.

PIA – IAMGOLD – COTE LAKE MINE CONNECTION

Revision: R1

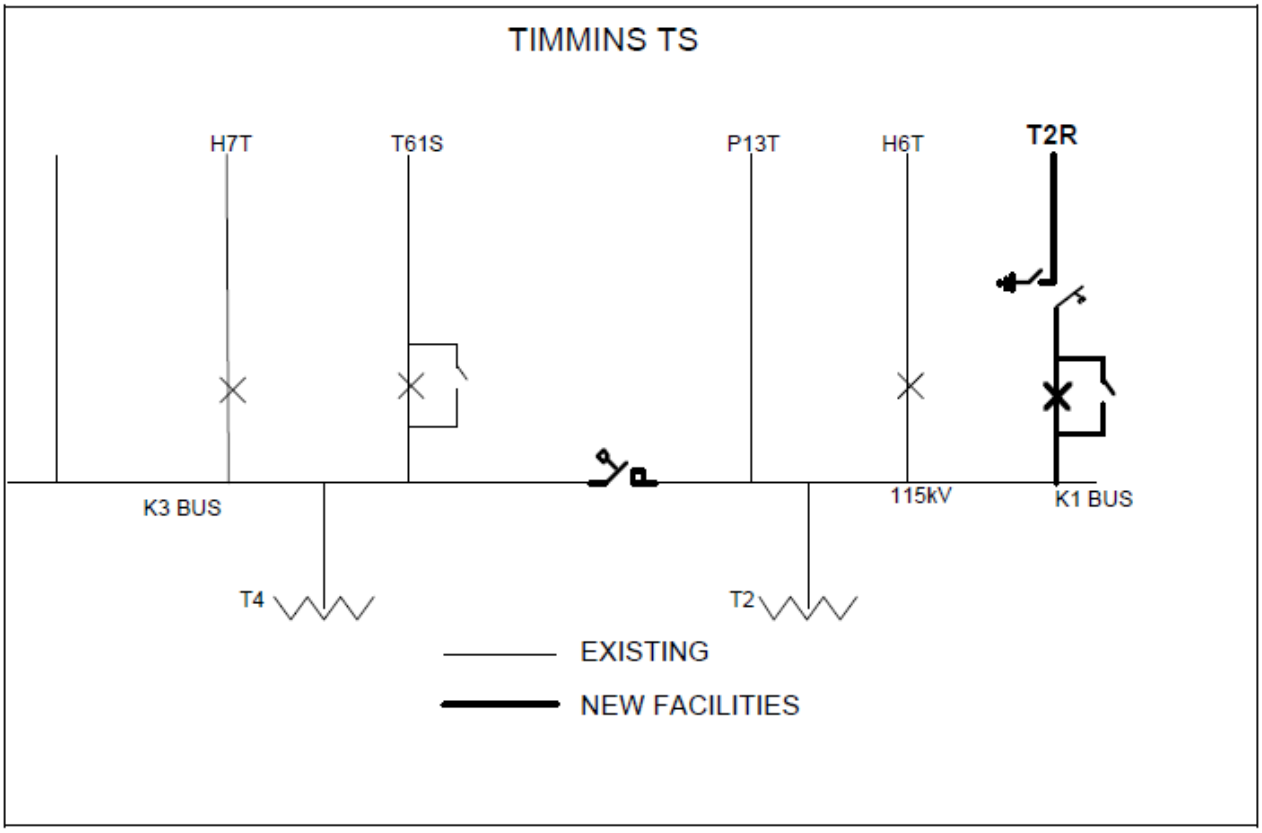

Figure 1: Timmins TS New facilities required for T2R circuit

PIA – IAMGOLD – COTE LAKE MINE CONNECTION Revision: R1

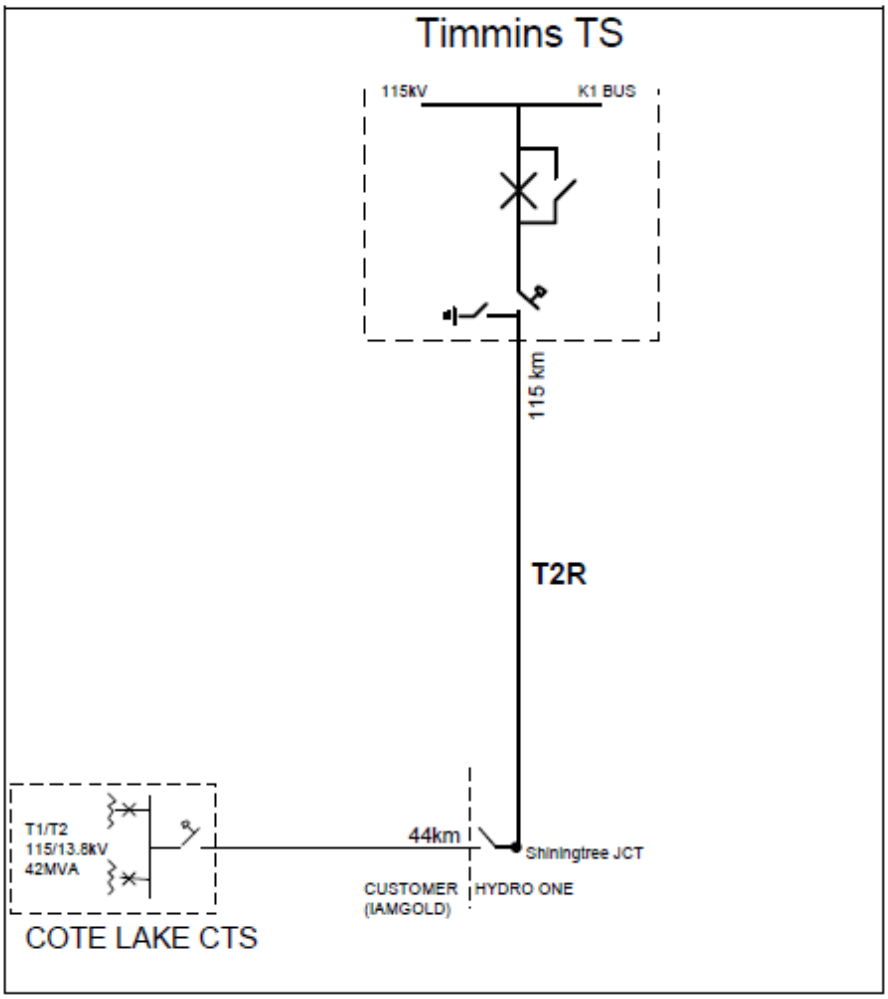

Figure 2 : Connection of Cote Lake CTS to Hydro One Transmission System

2.1 115kV Line T2R, 115kV line P13T line P15T

T2R will become a 159km radial line from Timmins TS (115km existing and 44km to be built). There will be 2 operation conditions for this new line.

- Operating Condition 1: The new breaker in service and the T2R line operates as a radial line with its own protection.
- Operating Condition 2: New breaker bypassed with T2R protection blocked. In this situation the new T2R line will be protected by the Group 2 settings of line P13T (the line which will be feeding T2R).

There are no existing settings for T2R.

P13T is a 4.5km line which uses direct underreaching Zone 1 and a permissive overreaching pilot scheme for the zone 2. The settings are set at 75/80% of line impedance for zone1 (ground/phase)

and 125% of line impedance for the zone 2 settings. A reverse Zone 3 is only used locally to supervise fast zone 2 trip. In addition to the pilot scheme which will offer fast tripping, there is a 400ms time delay with the same setting which will trip the local breaker.

3 PROPOSED PROTECTION & TELEPROTECTION SCHEME

3.1 GENERAL

The addition of the new line T2R from Timmins TS will require new redundant protections at Timmins TS to protect the line, as well as modifications to P13T line protections at both Timmins TS and Porcupine TS. Minor modifications to P15T at Timmins TS protections will be required as well.

3.2 ASSUMPTIONS

- As per IESO, the bus-tie is used to provide voltage support when P13T or P15T is out-of-service.
- The proponent will not tie the LV of the transformers with both transformers in service.
- No non-standard operating configurations will be allowed during the bus tie closure.
  - Breaker bypass K3T61S-S for T61S shall be open
  - New breaker bypass for T2R shall be open

3.3 SPECIFIC PROTECTION REQUIREMENTS

3.3.1 Timmins TS and Porcupine TS

- T2R (Operating Condition 1)
  - Install redundant (A and B) protections for line T2R
  - There shall be 2 zones of protection. The zone 1 shall be set to 80/75% (phase/ground) of the positive sequence line impedance and shall instantaneously trip. The zone 2 impedance shall be set to 125% of the positive sequence of the line. The fast zone 2 trip shall be delayed by 50ms to ensure a block signal not to arrive from the customer site.
  - There will be a timed zone 2 protection will be set with 400ms.
  - With the zone 2 settings the protection will see into approximately 70% of the transformer impedance, therefore a blocking signal will be required.
    - IamGold will be required to provide a reverse looking zone element which shall instantaneously send a block signal when a fault occurs within the customer's facility
  - Block and transfer trip shall brought to Timmins TS T2R protections for Operating Condition 1.
- Line P13T (Operating Condition 1: Timmins TS and Porcupine TS)
  - Zone 1 at Timmins TS will be delayed. As Timmins is a weak source it leads to a very low voltage even for out of zone faults, and the CVT error could be great

enough at such low voltages to cause zone 1 overreaching. The delay will be 150ms.

- P13T will be modified to a DCB scheme. The settings shall remain the same as standard POTT scheme. The existing zone 3 shall be modified to send a block signal to the opposite line end.
- A and B protections will connect to the new freestanding CT on the bus connection. This will overlap and zone the line protections between P13T and P15T, and will ensure that no settings changes will be required for the specific operating conditions that would allow the bus tie to be closed.
- Cross-tripping shall be enabled when the bus-tie is closed.
- CTs on T2R line side from the new T2R breaker shall be brought into the P13T protection so that T2R will be appropriately zoned off from P13T line protection when new breaker is in service. The CTs will be appropriately bypassed in operating condition 2.

- Line P13T (Operating Condition 2: Timmins TS and Porcupine TS).
  - Group 2 shall be a DCB scheme and will be employed only during Operating Condition 2.
  - Block and transfer trip shall brought to Timmins TS P13T protections for Operating Condition 2.
  - At Timmins TS the Group 2 Zone 1 settings shall be the same as the Group 1 Zone 1 setting.
  - As Porcupine is significantly stronger source than Timmins, Timmins TS will experience much higher apparent impedance than Porcupine when a fault occurs on the T2R line. It is not secure to set Timmins zone 2 to the required size due to risk of over-tripping and therefore sequential tripping shall be utilized. IE For most faults on T2R in this condition Porcupine will trip first followed by Timmins. This sequential tripping only occurs for faults on the T2R portion of the line when there is also loss of Transfer Trip from Porcupine. When TT channel is normal, a transfer trip signal will be sent from Porcupine to Timmins.
  - Zone 2 setting at Porcupine TS shall be set to see 125% of the maximum apparent impedance at the customer's HV connection. Tripping shall be delayed 80ms to ensure that no block signal will arrive from Timmins TS or the customer station.
    - The block from the customer station must be cascaded through Timmins TS in Operating Condition 2 (Group 2)
  - Zone 2 at Timmins TS shall be set for 125% of the positive sequence of the line T2R. Due to the high apparent impedance this will only pick up after Porcupine TS has cleared. The zone 2 will be delayed 50ms to ensure no block is received from Porcupine TS or the customer station.
  - The timed zone 2 settings for both Porcupine and Timmins shall be set to 2s as opposed to the standard 400ms in order to coordinate with possible faults on Hydro One LV systems.

  - The Transfer Trip and the Block signals from IamGold will be cascaded to Porcupine TS through Timmins TS.
- Line P15T (Timmins TS)
  - A and B protections will connect to the new freestanding CT on the bus connection. This will zone the line protections between P13T and P15T, and will ensure that no settings changes will be required for the specific operating conditions that would allow the bus tie to be closed. Cross-tripping shall be enabled when the bus-tie is closed.
  - A delay of 150ms for the Zone 1 at Timmins TS will be required in both Group settings. The settings will otherwise remain the same.

3.3.2 IamGold Facility

- Redundant transformer and HV bus protections are required to be compliant with the Transmission System Code (TSC).
- With the high ratio of line to transformer impedance a blocking signal will be required to be sent for faults at the proponent's facility.
- The proponent shall place a distance based protection as zoned by the connecting breaker's CTs looking into the facility with the settings below.
  - Upon detection of fault IamGold will send a block signal over both the main and alternate channel to Timmins TS and trip its own facilities.
  - The reverse looking zone element shall have coverage further than the group 2 zone 2 element at Porcupine TS. It shall be set at 125% of the difference between the group 2 zone 2 setting and the positive sequence line impedance.
- The 115kV circuit breakers are required to be equipped with breaker failure protection. When the HV circuit breaker connected to T2R fails, transfer trip signals (TT) must be sent to HONI through dual channels. The transfer tripping must be interlocked by the status of the local disconnect switch. Once the disconnect switch is opened, the transfer trip signals shall be removed.
- The proponent is responsible to establish dual telecommunication channels (Main and Alternate) to Timmins TS for the protection settings in Operating Condition 1 of line T2R.
- In operating condition 2 (group 2 settings for P13T) the block and transfer trip shall be cascaded through Timmins TS to Porcupine TS.
- IamGold will be required to participate in a Load Rejection SPS.
  - Should either T3 or T4 at Porcupine TS be out of service the proponent will be tripped.

4 FAULT CLEARING TIMES

- T2R
  - The longest fault clearing time for T2R will be for a line end fault.
  - MR (measuring relay) + DT (delay time) + BTM (breaker trip module) + BKR (breaker open time) = 25ms + 50ms + 6ms + 83ms = 164ms
- P13T (Group 1/Operating Condition 1)
  - The group 1 longest fault clearing time will be for a line end fault with the opposite line end open: MR (measuring relay) + DT (delay time) + BTM (breaker trip module) + BKR (breaker open time) = 25ms + 50ms + 6ms + 83ms = 164ms. This is an increase from the 144ms permissive echo longest fault clearing time.
- P13T (Group 2/Operating Condition 2)
  - For a fault on T2R Porcupine will detect the fault after the delay time and transfer trip Timmins TS.
    - MR (measuring relay) + DT (delay time) + TP (teleprotection) + BTM (breaker trip module) + BKR (breaker open time) = 25ms + 80ms + 15ms + 6ms + 83ms = 209ms
  - Upon loss of teleprotection the maximum fault clearing time becomes the local trip time at Porcupine plus the local trip time at Timmins:
    - MR (measuring relay) + DT (delay time) + BTM (breaker trip module) + BKR (breaker open time) + MR (measuring relay) + DT (delay time) + BTM (breaker trip module) + BKR (breaker open time) = 2 x (25ms + 50ms + 6ms + 83ms) +30ms (additional delay needed by Porcupine) = 358ms.

The Protection Impact Assessment that deals exclusively with protection and tele-protection. However, should this become a project, all other protection, control and telecom items will be addressed according to IESO Market Rules in the Transmission Planning Specification.

Customer Impact Assessment

A Customer Impact Assessment ("CIA") was sent to area customers on July 3, 2018.

The result of the impact assessment has established that there will be no adverse or negative impacts to other customers in the area.

The final CIA is provided as **Attachment 1** of this Schedule.

Hydro One Networks Inc.
483 Bay Street
Toronto, Ontario
M5G 2P5

CUSTOMER IMPACT ASSESSMENT

Iamgold – Cote Lake Mine Connection

Revision: **FINAL**
Date: **June 25, 2018**
AR#: **24322**

Issued by: **Transmission Planning Department**
System Development Division
Hydro One Networks Inc.

Prepared by:

Kirpal Bahra
Sr. Network Management Engineer
Transmission System Development
Hydro One Networks Inc.

Approved by:

Alessia Dawes
Transmission Planning Manager –North & West
Transmission System Development
Hydro One Networks Inc.

Disclaimer

This Customer Impact Assessment was prepared based on customer information available about the connection of the proposed project. It is intended to highlight significant impacts, if any, to affected transmission customers early in the project development process and thus allow an opportunity for these parties to bring forward any concerns that they may have. Subsequent changes to the required modifications or the implementation plan may affect the impacts of the proposed connection identified in Customer Impact Assessment. The results of this Customer Impact Assessment are also subject to change to accommodate the requirements of the IESO and other regulatory or municipal authority requirements.

Hydro One shall not be liable to any third party which uses the results of the Customer Impact Assessment under any circumstances whatsoever for any indirect or consequential damages, loss of profit or revenues, business interruption losses, loss of contract or loss of goodwill, special damages, punitive or exemplary damages, whether any of the said liability, loss or damages arises in contract, tort or otherwise.

1.0 Project Description

Iamgold Corp is developing a 72MW gold mine located 25km southwest of Gogama, Ontario. (See map in figure 1 below). To supply power to this new mine, Hydro One's idle T2R circuit will be rebuilt and energized from Timmins TS to Shiningtree JCT (115km in length) and connected to Timmins TS at 115kV. A new 44km circuit will then be built from Shiningtree JCT to the customer substation which will be constructed and owned by the customer (Iamgold).
(See Appendix A – figure 1) The proposed In-Service date for the mine is June 30, 2020.

Figure 1 – Timmins area Map and Station Locations

Area Customers

The following are area customers that may be impacted by the permanent operation of the proposed mining facility or work on Hydro One's station/line assets to connect the proposed project.

Table 1 – Area customers

Station	Circuit	Customer
Timmins TS Weston Lake DS Shiningtree DS	- T61S T61S	Hydro One Distribution
Timmins West Mine CTS	T61S	Lake Shore Gold

2.0 Technical Studies

Hydro One conducted short circuit, voltage performance and reliability assessment on the impact of the proposed project on area customer busses. Note: Voltage performance assessment for high voltage area busses can be found in the IESO System Impact Assessment which can be found on the IESO website. (CAA ID: 2017-623 Cote Gold Project)

Short-Circuit Study Analysis

The Cote Lake site will be equipped with two 7MVA synchronous condensers which will be used to help increase the short circuit level to support mining operations. During fault conditions, these condensers act as a source of short circuit current and will contribute to a marginal increase in the short circuit levels. This increase is minimal and final values remain within the allowable limits specific in the Transmission System Code, and within Hydro One equipment short circuit ratings. See Appendix B – Short Circuit Analysis

The incorporation of the proposed project into the Hydro One transmission system does not have any adverse impact on area short circuit levels, and remain within the limits described the Transmission System Code – Appendix 2. See Table 2 below

Table 2: Transmission System Code: Transmission System Connection Point Performance Standards

Nominal Voltage (kV)	Maximum 3ph Fault (kA)	Maximum SLG Fault (kA)
230	63	80 (usually limited to 63)
115	50	50
44	20	19 (usually limited to 8)
27.6	17	12

Voltage Performance

The Cote Lake main substation will install 2 x 20MVar SVC on the 13.8kV bus and a 115kV 7MVar shunt line reactor to help maintain acceptable voltages during both operation and contingencies assessed by the IESO. Voltage performance at Hydro One busses will also remain within the limits specified by the Transmission System Code, and Market Rules. The 115kV system in northern Ontario can reach voltages as high 132kV. Timmins TS also has a system control order which can allow Hydro One Timmins TS to operate up to voltages of 138kV if required by the IESO and Hydro One operations. The incorporation of Cote Lake mining facility does not have an adverse impact on area voltages. See Appendix B

3.0 Reliability Impact

Station Facilities

The Cote Lake substation will be radially supplied from Timmins TS via a newly rebuilt T2R circuit. The substation will be equipped with a high voltage circuit breaker which will be used to provide isolation of the customer substation from the transmission system for faults within the customer facility or on the Hydro One network. Furthermore, the station will be equipped with a 115kV motorized disconnect switch to provide electrical isolation and operating flexibility for maintenance activities which may occur at the customer site.

New station facilities will also be required at Timmins TS to provide electrical connection of the T2R circuit to Hydro One network. New station equipment will include a 115kV circuit breaker and motorized line disconnect switch to provide isolation of the 115kV network for faults or maintenance activities which may occur on the T2R transmission line or Cote Lake substation. The incorporation of these facilities is not expected to have a reliability impact to area customers.

Line Facilities

Hydro One will be rebuilding approximately 115km of T2R circuit from Timmins TS x Shiningtree JCT. This circuit is presently idle and shares a common line route and structures with an energized T61S circuit. A motorized disconnect switch at Shiningtree JCT will service as a demarcation point between the Hydro One and customer owned transmission line and substation. Iamgold will build a new 44km single circuit line from this demarcation point to the mine site.
Interruptions due to forced and planned outages on the line will not impact area customers as this will be a radially supplied customer terminating directly onto a Hydro One network bus at Timmins TS.

Outage Requirements

Outages on T61S circuit may be required during line construction on the T2R as both circuits share common towers along the line route from Timmins to Shiningtree. Hydro One outage planning will coordinate with area customers to minimize supply interruption frequency and duration.

4.0 Conclusions and Recommendations

Hydro One system and customers will not be adversely impacted by the connection of the Cote Lake Mine. It is recommended that area customers review the impact of the short circuit change on their facilities and take appropriate and timely action to address any safety/technical issues arising out of the changes which will result following incorporation of Cote Lake mining facility.

Appendix A – Diagrams

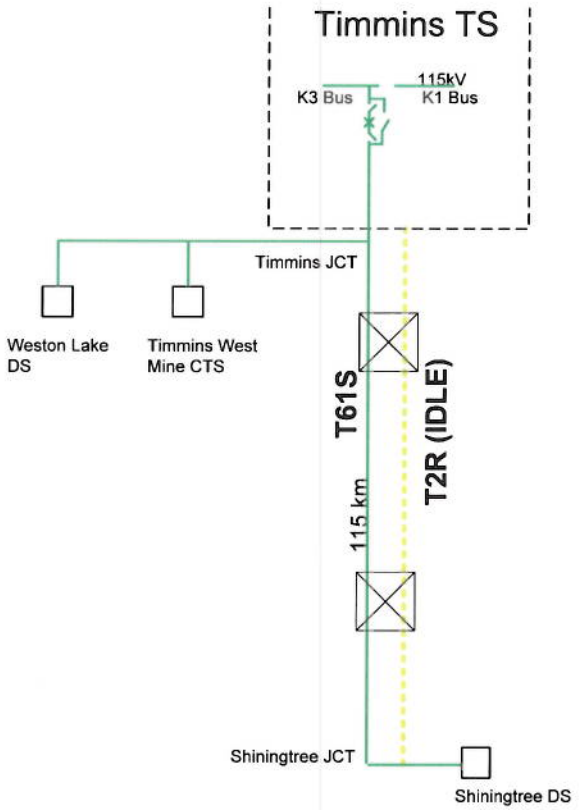

Figure 1 – Existing Configuration T2R/T61S Right of Way

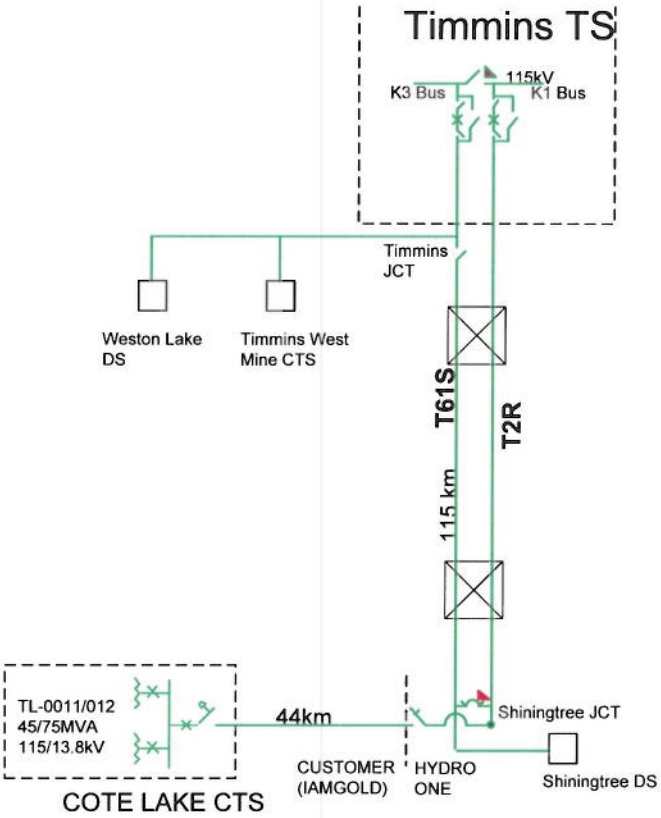

Figure 2 – Proposed Configuration with Connection of Cote Lake Mining facility

Appendix B – Voltage & Short Circuit Study Results

Table 3 – Voltage Performance with Proposed Project

Station	Nominal Bus Voltage (kV)	Existing System (kV)[1]	Cote Lake CTS In Service Pre-Contingency (kV)	Voltage Change (%)	Loss of Cote Lake CTS Load (pre-ULTC) (kV)	Voltage Change % (pre-ULTC) (%)[2]
Timmins K1 bus	115	127.6	128.9	1.02	126.93	-1.51
Timmins K3 bus	115	127.7	128.6	0.69	127.08	-1.19
Timmins TS DESN	27.6	28.1	28.3	0.83	27.93	-1.32
Shiningtree JCT T61S	115	127.7	128.6	0.70	127.00	-1.21
Weston Lake DS	115	126.7	127.6	0.76	126.09	-1.21
Timmins West Mine CTS	115	126.9	127.8	0.70	126.21	-1.21
Shiningtree JCT T2R	115	-	131.4	-	-	-

1-Voltage based on max area loading
2-Post ULTC scenario results in acceptable voltage change.

Additional Notes
Base voltage for 115kV and 27.6kV system is 118.05 and 27.6kV respectively
Cote Lake CTS modeled at 0.9 pf
Loss of load results in corresponding tripping of T2R circuit
Customer SVC assumed In-Service during normal operation

Table 4 – Existing Short Circuit levels at Area busses

		Existing System(kA)			
		3PH		L-G	
Bus	Voltage (kV)	Symm	Asymm	Symm	Asymm
Timmins K1	115	8.93	9.91	8.82	9.63
Timmins K3	115	8.92	9.91	8.94	9.82
Timmins TS	27.6	12.64	12.80	10.14	11.30
Shiningtree JCT T61S	115	1.09	1.10	0.62	0.62
Weston Lake	115	2.20	2.24	1.33	1.35
Timmins West Mine CTS	115	4.02	4.12	2.74	2.79
Shiningtree JCT T2R	115	1.08	1.08	0.68	0.68

Base voltage for 115kV and 27.6 system is 118.05 and 27.6kV respectively with prefault voltages at 1.076pu

Table 5 – Short Circuit Level with Proposed Project

		With Cote Lake Mining Facility (kA)				Short Circuit Level change (kA)			
		3PH		L-G		3PH		L-G	
Bus	Voltage (kV)	Symm	Asymm	Symm	Asymm	Symm	Asymm	Symm	Asymm
Timmins K1	115	9.20	10.20	8.99	9.81	0.27	0.29	0.17	0.18
Timmins K3	115	9.09	10.08	9.05	9.93	0.17	0.17	0.11	0.11
Timmins TS	27.6	12.75	12.91	10.19	11.36	0.11	0.11	0.05	0.06
Shiningtree JCT T61S	115	1.10	1.10	0.62	0.62	0.01	0.00	0.00	0.00
Weston Lake	115	2.21	2.25	1.33	1.35	0.01	0.01	0.00	0.00
Timmins West Mine CTS	115	4.05	4.15	2.75	2.80	0.03	0.03	0.01	0.01
Shiningtree JCT T2R	115	1.46	1.53	0.76	0.77	0.38	0.45	0.08	0.09

Base voltage for 115kV and 27.6 system is 118.05 and 27.6kV respectively with prefault voltages at 1.076pu