ONTARIOPOWER GENERATION

Document Number: FIN-FORM-PA-004*	Revision: R03**	Page: 1 of 1

REPORT OF EQUIPMENT IN-SERVICE: Capital Projects Only

Instructions: Forward completed and signed copy to your Controller. Controller to review and issue to Asset Management

Date 20-Dec-16

Project / Asset Description	Project no.
D2O Storage and Drum Handling Facility	16-31555

Approved Project Amount	Date of project release	Work order no. (if app.)	Project Management Group
$381,129k	06-Mar-2015		Nuclear Projects

In-service amount previously reported	% of work completed this report	% of work completed LTD	Capital in-service amount of this report	date placed in-service	date ready for service
$14,637,565 (5%)	41%	46%	$160,000,000	December 31, 2016	December 31, 2016

Site/Location Name: Darlington GS

Interim In-Service Transfer Credit Account (Controller)

• Super Asset Number (Controller)	001151
• Super Asset Description (Controller)	REFURB DARLINGTON GS COMMON
• Asset Class (Controller)	15340000 system & 152000000 building
• Life To Date Actual Expenditures	$340,895,780.00 (FW124_2016)
• Description of key equipment installed including equipment code /SCI where applicable. Provide cost breakdown of key equipment.	See attached Memo & Cost Breakdown attachments 122,137,300 for asset class 152000000 building 37,867,738 for asset class 15340000 system/equipment
• Company Code / Business Area (Controller)	9807 DNGS
• Description of equipment that was removed as part of this project (in-service year, asset name, asset number, date installed, and date removed). Complete Surplus Asset Declaration form. (See Supply Chain Website under Investment Recovery). • Removal costs	N/A for this REIS

Authorized Plant		Authorized – Project Manager	
	Date		2017-01-10 Date
BU	Phone #	Projects & Modifications BU	703-8605 Phone #
Name (printed) & Empl #	Signature	Anthony Colella - [redacted] Name (printed) & Empl. #	Signature
Hydroelectric or Fossil – Production /Plant Manager Nuclear – Station Director of Eng./Ops. & Mtce., OR attach AFS Form (N-FORM-10091-R006)		Project Manager	

Controller Review

Reviewed by:	Date:	Reviewed by:	Date:
Derek Kindlon – Refurbishment Controller Finance Station Controller		Shawn Klis – P&M Controller Finance Controller for Project Organization	

*Associated with: Project Accounting and Reporting Procedure FIN-PROC-PA-013 and Fixed Asset Accounting, FIN-PROC-PA-005
** Revised March 2007

ONTARIO POWER GENERATION

OPG Proprietary

January 10, 2017

File No.: NK38-CORR-38000-0630378

Zar Khansaheb
Director of Operations & Maintenance
Darlington Nuclear Generating Station

Report of Equipment In-Service (REIS) Submission for D2O Storage and Drum Handling Facility; Project 16-31555, as of December 31, 2016

Zar,

Please find attached the Report of Equipment In-Service (REIS) form, dated December 20th, 2016, for the D2O Storage and Drum Handling Facility, project number 16-31555. This REIS places $160M of capital in service or in a "useful" state in the event the new PHT storage tanks installed in the D2O Storage and Drum Handling Facility basement are needed to store Unit 2 PHT water in an emergency prior to full AFS declaration. The following project milestones were achieved in November of 2016 and are presented below as justification supporting this REIS submission:

- The Seismic Dyke topping slab was poured on August 6, 2016, which completed the seismic dyke civil/structural installation. All inspection and test plans (ITP's) and quality documents related to this work were signed off by both civil contractors; Ellis Don and Aecon and completion assurance was completed and verified by OPG Field Engineering. If required, copies of the signed off ITPs are available for reference.
- CNO milestone milestone #78, Campus Plan D2O Heavy Water Storage Facility involved the completion of the mechanical installation of piping and tanks sufficient to establish a flow path that connects up to 5 D2O storage tanks in the new Heavy Water Management Building West Annex (HWMB WA) basement to the PHT transfer header tie-in valve within the existing HWMB/TRF building. This installation establishes a flow path to fill the new PHT storage tanks with Unit 2 PHT water. This milestone was completed on November 30th, 2016. A copy of the milestone completion declaration is attached to this memo for reference and includes copies of the contractor's signed ITPs, which have been reviewed and verified by OPG Field Engineering Quality Oversight

Life to Date project costs up to the end of December, 2016, amount to $340M. To determine the amount of costs that are associated with the equipment that have been made available to use for supporting the flow path for the PHT water to the tanks, a calculation has been completed that apportioned the costs associated with the civil structure and equipment that has been completed in conjunction with the milestone. These costs were evaluated and distributed appropriately to calculate the in service value of $160M that is included in the REIS form attached.

© Ontario Power Generation Inc., 2017. This document has been produced and distributed for Ontario Power Generation Inc. purposes only. If you are not the intended recipient, you are hereby notified that any review, retransmission, dissemination, distribution, copying, conversion to hard copy or other use of this communication is strictly prohibited.

Please advise if you have any questions or require further clarification.

Sincerely,

Anthony Colella, Manager
D2O Storage Project
Darlington and Infrastructure Design Projects
Projects & Modifications

Attachments:

1. Project 16-31555 REIS submission dated December 20th, 2016
2. D2O REIS Scope of Work – January 10, 2016 (distributed LTD costs)
3. 2016 CNO Milestone Completion (M/S #76) memo – PHT Mechanical Tie-ins

cc: Nahil Rahman, Art Rob, John Blazanin

ONTARIO POWER GENERATION

Darlington Nuclear, PO BOX 4000, Bowmanville, ON L1C 3Z8

MEMORANDUM

Anthony Colella
Manager, D2O Storage Project
O11-4

2016 CNO Milestone Completion – M/S #76

Project Name & Number: 16-31555 – Heavy Water Management Building West Annex

Milestone Title: Primary Heat Transport (PHT) Mechanical Tie-ins

Due Date: 30 November 2016 Completion Date: 30 November 2016

Key Milestone ☒ Department Milestone ☐

(Indicate proof of milestone completion, e.g. attached AFS form)

Refer to attached memo (NK38-CORR-38000-0627698) showing mechanical flow path for PHT system with approved ITPs and work plans.

Prepared by:

Mike Marontate
Senior Technical Engineer/Officer
D2O Storage Project

Approved by:

Anthony Colella
Manager, D2O Storage Project

A00004-CORR-10017

SNC·LAVALIN Nuclear AECON Joint Venture

SNC-LAVALIN NUCLEAR INC.
2275 Upper Middle Rd East
Oakville, ON
L6H 0C3

Tel: (905) 829-8808
Fax: (905) 829-8809

Via Electronic Mail – Transmittal No.: A00004-TML-2956

December 07, 2016

NK38-CORR-38000-0627698

Project Manager, Heavy Water Management Building West Annex
Ontario Power Generation Inc.
1908 Colonel Sam Drive
Oshawa, ON
L1H 8P7

Attention: Mr. Anthony Colella – Project Manager – HWMB West Annex Project
Darlington Nuclear Refurbishment Program
OPG Darlington Nuclear Generating Station (DNGS) – HWMB West Annex Project

Subject: **Confirmation of Mechanical scope completion to establish PHT flow path to support November 30th Milestone.**

References:

1. Darlington Heavy Water Management Building West Annex Scope of Work NK38-SOW-38000-10011.

Attachment:

1. PHT Line Flow Diagram and ITPs.

Dear Anthony,

This letter is issued to provide confirmation of the completion of the Scope of Work for the Construction Work Packages (CWP's) listed below. The work associated with these packages was completed before the end of the day November 30th, 2016.

- A00004-M-120421-F5001 - PHT Line Flushing
- A00004-M6-120421-TS-01-04 - PHT Line Pressure Test
- A00004-M6-120421-W41001 – PHT Tank Tie-In
- A00004-M6-120402-D22001 - PHT Line Part A. Tie-In
- A00004-M6-120421-D25001 - PHT Line Part B. Tie-In
- NK38-WPL-38110-0457864 - Part A Tie-In for Valve 940 and 941
- NK38-WPL-38110-0616951 - Part B (Final) Tie-In

The sign-offs in the Inspection and Test Plans (ITP's) within these identified CWP's were previously agreed to amongst the joint OPG / Aecon project team to be the indicators that would establish a mechanical flowpath from the HWMB to the PHT Storage Tanks in the new West Annex-HWMB.

SNC·LAVALIN Nuclear AECON Joint Venture

SNC-LAVALIN NUCLEAR INC.
2275 Upper Middle Rd East
Oakville, ON
L6H 0C3

Tel: (905) 829-8808
Fax: (905) 829-8809

The signed ITP steps as attached, confirm the completion of installation and QC verifications for the pre-commissioning, testing and connection of Line L486 from the PHT Tie-in Valve V940 to the PHT Storage Tanks TK14-21.

All remaining verification steps will be signed off as part of the CWP close-out process.

Scanned copies of selected pages(signed) from the referenced documents are attached for reference.

Sincerely,

Julianne den Decker
D2O Project Director
SLN-Aecon Joint Venture

cc:

OPG
Nahil Rahman, Mike Marontate, Penny-Lynn Macdonald.

Project Mailbox
DocControl628411@snclavalin.com

SLN-Aecon JV
Sam Bambino, Rob Stewart, Radu Dudu, Tony Pallotta, Jack Gibson, Peter Ferguson, Jo shanks, Michael Battye, Mike Petrovic, Dave Marsh, Vilayvanh Phetxomphou, Robert Hachey, Nicolas Lepipas, Alex Chen, Mo Arbabi Monfared, Nafees Shah, Nasser El-Hindi, Richard Murray.

Attachment 1

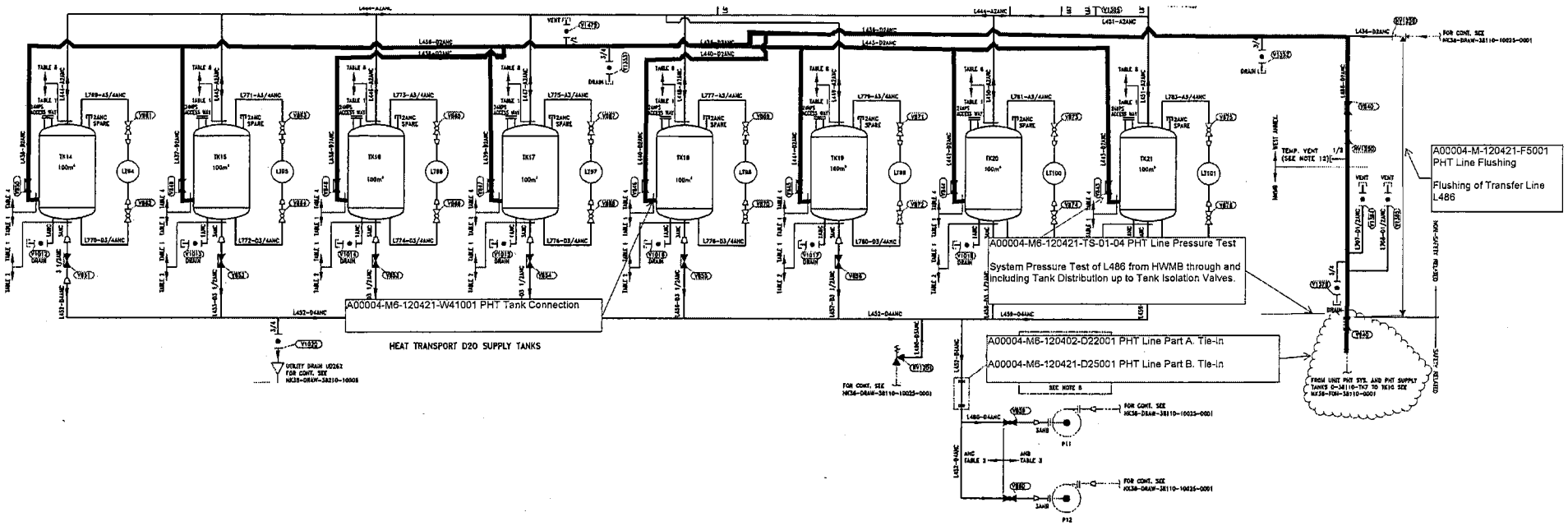

INSPECTION AND TEST PLAN

AECON

Prepared by	Paul Sanders	Date	8/Nov/16	A.I./A.N.I. Acceptance	N/A	Date	
QA Approval		Date	Nov 10/16	Client Approval		Date	NOV 10/2016
PM Approval		Date	Nov-10/16				

Customer reference	OPG Darlington NGS - D20 Project, OPG WO# 03013254/0317001
Aecon Industrial Reference	Aecon Project # A00004
Quality Reference	Aecon Industrial Quality Assurance Manual, N286 Quality Assurance Manual Fabrication Supplement, N286 Quality Assurance Manual EPC Projects, CSA N285 -08 Update 2, ASME-B31.1 2010,
System	MEC# 88528 Rev. 01, EC# 120421 Rev. 04: Flushing of D2O Supply Lines (L486, L707, L708, L436, L440, L433, L705, L706) in HWMB West Annex and Existing HWMB Bldg.
Drawing number	Flow Diagram: NK38-DRAW-38110-10025sht 0001/ 0002 ISO drawings: NK38-DRAW-38009-10001/ 10003/ 10005/ 10042/ 10043/ 10044/ 10047
Inspection and Test Plan Number	A00004-M-120421-F5001
Revision Number	0

Operation							Witness Point				
No.	Department	Location Code	Description	Controlling Document	Acceptance Criteria	History Docket	Aecon	Client	A.I./A.N.I.	OPG	Comments
5	Construction	1	Verify received materials are free from damage and deterioration and material identification, grade, and size is compliant and traceable to supplied documentation. If any material is found to be unacceptable or has lost traceability, an NCR and /or OS&D Release to field for installation.	N286 QA Manual Section 3 Subsection 3.10 EC# 120421 QCP 501.1 QCP 505.7 QCP 509.8 QCP 509.17 QCP 509.49 WI Opn 103.2	Meets Drawings, BOM, EC# 120421 QCP 505.7 QCP 509.17 QCP 509.49 QCP 501.1	Q010 Inspection Report N014 Material Log Q001 Non-Conformance Report Q002 NCR Log	H D	Nov 20/16			
	QA/QC	1	Verify received materials are free from damage and deterioration and material identification, grade, and size is compliant and traceable to supplied documentation. If any material is found to be unacceptable or has lost traceability, an NCR and /or OS&D Release to field for installation.								

1 of 12 FE 10/11/2016

Inspection and Test Plan Number	A00004-M-120421-F5001	Revision Number	0

Operation			Description	Controlling Document	Acceptance Criteria	History Docket	Witness Point				Comments
No.	Department	Location Code					Aecon	Client	A.I./A.N.I.	OPG	
10	Construction	I	**Notify** AECON QC prior to the start of work. Compile, Stage all relevant and required, Parts, Permits, Equipment and Drawings	Drawings, EC# 120421 WI Opn 102.3	Meets EC# 120421	This ITP	V				
	QA/QC	I	**Verify** all required Drawings, Parts, Permits and Equipment is compiled and staged.								
15	Construction	I	Prior to Execution **Ensure** All Calibrated Equipment has a valid and current calibration sticker attached, and a valid and current copy of a calibration certificate has been placed in this CWP. All measurements are completed, recorded and peer verified.	EC# 120421 QCP 311.0 WI Opn 104.6	Meets EC# 120421 QCP 311.0	This ITP Calibration Certificate(s)	V				
	QA/QC	I	**Verify** all Calibrated Equipment (if required) has a valid and current Calibration Sticker attached, and a valid and current copy of the Calibration Certificate has been placed in this CWP.								

Inspection and Test Plan Number	A00004-M-120421-F5001	Revision Number	0

Operation							Witness Point				
No.	Department	Location Code	Description	Controlling Document	Acceptance Criteria	History Docket	Aecon	Client	A.I./A.N.I.	OPG	Comments
20	Construction	I	Review Precurser Checklist has been completed to ensure required Installations and inspections have been completed are documented.	EC# 120421 NK38-DRAW-38110-10025 sht 001/002, ISO drawings Precurser Checksheet Opn WI 200.6.1	EC# 120421 NK38-DRAW-38110-10025 sht 001/002, ISO drawings	Precurser Checksheet This ITP	V				
	QC	I	Verify and Document piping to be flushed has been installed and inspections have done and documented.				D				
25	Construction	I	Determine and lay out the correct temporary flushing fitting locations per piping isometric drawings	EC# 120421 NK38-DRAW-38110-10025 sht 001/002, ISO drawings Opn WI 200.6.2, 200.6.3, 200.6.8, 200.6.13, 200.6.17	EC# 120421 NK38-DRAW-38110-10025 sht 001/002, ISO drawings	This ITP	V				
	QC	I	Verify and Document temporary flushing fitting locations marked for installation matches the location on the piping isometric drawings prior to preparing pipe				D				

Inspection and Test Plan Number	A00004-M-120421-F5001						Revision Number				0	
Operation							Witness Point					
No.	Department	Location Code	Description	Controlling Document	Acceptance Criteria	History Docket	Aecon	Client	A.I./A.N.I.	OPG	Comments	
30	Construction	I	Perform "As-Left" FME inspection to ensure internal surfaces of pipe, valve and fittings are cleaned as per N-PROC-MA-0018 before installation.	N-PROC-MA-0018 QCP 510.9 WI Opn 200.6.5, 200.6.11, 200.6.15	N-PROC-MA-0018	Q010 Inspection Report (FME)	H D			V		
	QC	I	Perform and Document second "As Left" FME inspection is completed prior to installation of temporary flushing fittings.									
35	Construction	I	Install fittings, hose connectors and valves as per connections marked on the flush circuit drawings.	Quality Manual QCP 309.33 WI Opn 200.6.6, 200.6.7, 200.6.9, 200.6.12, 200.6.16	Meets EC# 120421	Q010 Inspection Report M013 Threaded Assembly Report	W D					
	QA/QC	I	Verify installation of fittings, hose connectors and valves									

Inspection and Test Plan Number	A00004-M-120421-F5001	Revision Number	0

Operation			Description	Controlling Document	Acceptance Criteria	History Docket	Witness Point				Comments
No.	Department	Location Code					Aecon	Client	A.I./A.N.I.	OPG	
40	Construction	I	Perform "As-Left" FME inspection to ensure internal surfaces of pipe, valve and fittings are cleaned as per N-PROC-MA-0018 before installation.	N-PROC-MA-0018 QCP 510.9 WI Opn 200.6.22	N-PROC-MA-0018	~~W 026 Field Weld Inspection Checklist~~ Q010 Inspection Report (FME)	H D				
	QC	I	Perform and Document second "As Left" FME inspection is completed prior to installation of temporary flushing fittings.								
45	Construction	I	Install threaded fitting, valve and hose adapter as per connections marked on the flush circuit drawing.	Quality Manual NK38-DRAW-38009-10005 QCP 309.33 WI Opn 200.6.23	Meets EC# 120421	Q010 Inspection Report M013 Threaded Assembly Report	W D				
	QA/QC	I	Verify installation of threaded coupling, valve and hose adapter								

Inspection and Test Plan Number	A00004-M-120421-F5001	Revision Number	0

Operation			Description	Controlling Document	Acceptance Criteria	History Docket	Witness Point				Comments
No.	Department	Location Code					Aecon	Client	A.I./A.N.I.	OPG	
50	Construction	I	Setup the flush circuit per the work instructions. Ensure cam lock levers are tie-wrapped.	Quality Manual	Meets EC# 120421	This ITP	[illegible] 22-11-16				
	QA/QC	I	Notify Client QA at least 24 hrs prior to flushs. Verify Gauges are calibrated and flush setup as per work instructions / flush circuit diagrams. Verify cam-lock levers are secured.	WI Opn 200.6.25, 200.6.26, 200.6.27		M008 Recirculation Flush Data Sheet	H D				
55	Construction	I	Perform the pump closed circuit flush per work instructions.	WI Opn 200.6.30	Pump Skid closed circuit	This ITP	[illegible] 22-11-16			JB 22/11/16	Flush Pressure: <70psi(g) [based on pump curve] Rate: 200 l/min for 10 min.
	QA/QC	I	Witness flush				W			W 23/11/16	witness point waived and moved to steps #75 and 85 As per OPG e-mail J. Stockwell. MD 22/11/2016

Nov 22/16 - J. Stockwell endorsed OPG to witness Pipe flushing in OPN 65 and VID purging in OPN 75.
R. Murray
11/23/16

Inspection and Test Plan Number	A00004-M-120421-F5001	Revision Number	0

Operation No.	Department	Location Code	Description	Controlling Document	Acceptance Criteria	History Docket	Witness Point: Aecon	Client	A.I./A.N.I.	OPG	Comments
60	Construction	I	Take sample of the water to Chem Lab for testing.	Quality Manual WI Opn 200.6.31	Meets EC# 120421	This ITP	V D			V	Attach copy of lab results see attached e mail from Paul Renaud dated 22 Nov 2016
	QA/QC	I	Verify results of water test are acceptable.								
65	Construction	I	Perform the flush per work instructions **Appendix Operation A and B**	WI Opn 200.6.33, 200.6.34, 200.6.35, 200.6.36, 200.6.37	Op A 23-11-16 Meets EC# 120421 Op B 23-11-16	M008 Recirculation Flush Data Sheet	H D 23-11-16			V	Flush Pressure: <70psi(g) [based on pump curve] Rates: Hose purge **(Op A):** 260 l/min (2 NPS) - 5 sec **Flush (Op B):** 430 l/min - 30 min RM 11/23/16
	QA/QC	I	Verify results of flush and record results on required documents.								
70	Construction	I	Take sample of the water to Chem Lab for testing.	Quality Manual WI Opn 200.6.38, 200.6.39, 200.6.40	Meets EC# 120421	Q010 Inspection Report	H D 25-11-16			V	Attach copy of lab results see attached e mail from Paul Renaud dated 24 Nov 2016
	QA/QC	I	Verify results of water test are acceptable and record results								

Inspection and Test Plan Number	A00004-M-120421-F5001						Revision Number			0	
Operation							Witness Point				
No.	Department	Location Code	Description	Controlling Document	Acceptance Criteria	History Docket	Aecon	Client	A.I./A.N.I.	OPG	Comments
75	Construction	I	Perform the vent and drain line flush per work instructions **Appendix Operation C**	WI Opn 200.6.41, 200.6.42	Meets EC# 120421	**M008** Recirculation Flush Data Sheet	H			W	Flush Pressure: <70psi(g) [based on pump curve] Rate: 18 l/min (1/2 NPS) 31 l/min (3/4NPS) 2 min each. Witness point waived by OPG PE Keith Brown See attached e-mail
	QA/QC	I	Verify results of flush and record results on required documents.				D				
80	Construction	I	Drain Piping as per work instructions	WI Opn 200.6.44	Meets EC# 120421	This ITP	V				
	QA/QC	I	Verify piping has been gravity drained								
85	Construction	I	**Disconnect** hoses, valves and pump assembly **Remove** temporary fittings	Quality Manual WI Opn 200.7.1, 200.7.2, 200.7.5, 200.7.8, 200.7.11, 200.7.14	Meets EC# 120421	This ITP	V				
	QA/QC	I	Verify removal of temporary fittings as per the marked flush circuit drawings.								

Inspection and Test Plan Number	A00004-M-120421-F5001	Revision Number	0

Operation No.	Department	Location Code	Description	Controlling Document	Acceptance Criteria	History Docket	Witness Point: Aecon	Witness Point: Client	Witness Point: A.I./A.N.I.	Witness Point: OPG	Comments
90	Construction	I	Perform "As-Left" FME inspection to ensure internal surfaces of pipe are free of any foregn material	N-PROC-MA-0018 QCP 510.9 WI Opn 200.7.3, 200.7.6, 200.7.9, 200.7.12, 200.7.15	N-PROC-MA-0018	Q010 Inspection Report (FME)	H D			V	
	QC	I	Perform and Document second "As Left" FME inspection is completed prior to installation of FME caps.								
95	Construction	I	Install FME covers and permanent fittings as marked on the flush circuit drawings.	QCP 309.32 QCP 309.33 N-PROC-MA-0018 WI Opn 200.7.4, 200.7.7, 200.7.10, 200.7.13, 200.7.16	N-PROC-MA-0018	Q010 Inspection Report M013 Threaded Assembly Report	W D				
	QA/QC	I	Verify installation of FME caps and permanent fittings								
100	Construction	I	Perform walkdown and Final Inspection as per Z299.3 Verify and Document Final Inspection As per Z299.3	N286 Quality Manual EPC Projects QCP 309.67 QCP 310.2 QCP 510.9 WI Opn 200.7.18	N286 Quality Manual EPC Projects	Q010 Inspection Report G 008 Punch List Form	H D	S.N H		V	Note: Q010 Form Ensure as left photos were taken
	QA/QC	I	Aecon QC and Construction and or Field Engineering will perform a Final Walk Down Inspection to Ensure final product completion and Document any deficiencies.								

INSPECTION AND TEST PLAN

AECON

Prepared by	Ian Cameron	Date	20-Nov-2016	A.I./A.N.I. Approval	Howard	Date	Nov. 23, 2016
QA Approval		Date	Nov 23/16	Client Approval		Date	NOV 22/2016
PM Approval		Date	22 Nov 2016				

Customer reference	OPG Darlington NGS - D2O Project, OPG WO #03013254
Aecon Industrial Reference	Project # A00004
Quality Reference	Aecon Industrial Quality Assurance Manual, N286 Quality Assurance Manual EPC Projects, B51 Manual, Issue 4, CSA N285 -08 Update 2, CSA B51-2009, Update 1, ASME B31.1 2010, FICREQ03, FICREQ04, FICREQ08, FICREQ12, FICREQ13, FICREQ19, FICREQ21
System	EC #120421, Installation of Piping in West Annex Bldg, Class 6
System	EC #123130, Installation of Tunnel Frames Supports inside Pipe Chase, Class 6
Drawing number	Flow Diagrams, Design Pressures, Temperatures, and CRN will be indicated for each Isometric Drawing or Line
Inspection and Test Plan Number	A00004-M6-120421-TS-01-04 — Revision Number: 0

Operation			Description	Controlling Document	Acceptance Criteria	History Docket	Inspection Point				Comments
No.	Department	Location Code					Aecon	Client	A.I./A.N.I	OPG	
5	QA/QC	I	**Verify** received materials are free from damage and deterioration and material identification, grade, and size is compliant and traceable to supplied documentation. If any material is found to be unacceptable or has lost traceability, an NCR and /or OS&D Release to field for installation.	N286 QA Manual Section 3 Subsection 3.10 EC #120421 QCP 501.1 QCP 505.7 QCP 509.8 QCP 509.17 QCP 509.49 WI Opn 103.2	Meets Drawings, BOM, EC #120421 QCP 505.7 QCP 509.17 QCP 509.49 QCP 501.1	MTR / C of C N014 Q001 Q002	OT 23 Nov 2016 H D		V*	V	** SEE BACK OF PAGE.
10	Construction	I	**Notify AECON QC prior to the start of work.** Compile, Stage all relevant and required, Parts, Permits, Equipment and Drawings	Drawings, EC #120421 WI Opn 102.4 & 103.1	Meets EC #120421	Q040 ITP	OT 23 Nov 2016 V				
	QA/QC	I	Verify all required Drawings, Parts, Permits and Equipment is compiled and staged.								
15	Construction	I	**Prior to Execution** **Ensure All** Calibrated Equipment has a valid and current calibration sticker attached, and a valid and current copy of a calibration certificate has been placed in this CWP. All measurements are completed, recorded and peer verified.	EC #120421 QCP 311.0 WI Opn 104.6, 600.6.14	Meets EC #120421 QCP 311.0	Q040 ITP G026 M&TE Log	V				
	QA/QC	I	**Verify** all Calibrated Equipment (If required) has a valid and current Calibration Sticker attached, and a valid and current copy of the Calibration Certificate has been placed in this CWP.								

NOV 2 3 2016

* ~~See reverse side of this page regarding selected material verification.~~ Fully based on individual package reviewed.

Form Number Q 040 Rev 2

Inspection and Test Plan Number	A00004-M6-120421-TS-01-04	Revision Number	0

Operation No.	Department	Location Code	Description	Controlling Document	Acceptance Criteria	History Docket	Inspection Point: Aecon	Client	A.I./A.N.I	OPG	Comments
NOTE: ITP Construction Operation Numbers 200.7 can be Performed in any Sequence. The QC Verification Operations Shall be performed in Correlation with the Related Construction Activities Performed Sequence.											
Installation of Piping Supports 0-38000-HG926, 0-38000-HG824, 0-38000-HG928 to 0-38000-HG937 As per NK38-DRAW-38009-10003 and Support Installation Details											
Installation of Piping Supports 0-38000-HS841 to 0-38000-HS861 As per NK38-DRAW-38009-10005 and Support Installation Details											
Installation of Piping Supports 0-38000-HG1134 As per NK38-DRAW-38009-10043 and Support Installation Details											
Installation of Piping Supports 0-38000-HG1120 to HG1124, HG1511 As per NK38-DRAW-38009-10043 and Support Installation Details											
Installation of Piping Supports 0-38000-HR1164, 0-38000-HR1165, 0-38000-HR1173 As per NK38-DRAW-38009-10047 and Support Installation Details											
Installation of Field Run Piping Supports As per N-STM-01110-10009 & N-STM-01110-10010											
20	Construction	I	**Verify** Support Location and **Ensure** the tag number matches the pipe support number and **Ensure** all measured distances are as per the drawing.	Drawings, EC #120421 QCP 510.9 WI Opn 200.6.1, 200.6.2, 200.6.9, 200.6.10, 200.6.20, 200.6.21, 200.6.31, 200.6.32, 200.6.44, 200.6.45, 200.6.58, 200.6.59, 200.6.66, 200.6.67, 200.6.73, 200.6.74, 200.6.88, 200.6.89, 200.6.102, 200.6.103, 200.6.118, 200.6.119, 200.6.126, 200.6.131, 200.6.134, 200.6.143, 200.6.145	Support Installation Drawings	Q-10 Inspection Report	V				
	QA/QC	I	**Verify** and **Document** the Support Location, and the tag number matches the pipe support number, **Verify** and **Document** all measured distances are as per the drawing.				D				

Inspection and Test Plan Number	A00004-M6-120421-TS-01-04	Revision Number	0

Operation			Description	Controlling Document	Acceptance Criteria	History Docket	Inspection Point				Comments
No.	Department	Location Code					Aecon	Client	A.I./A.N.I	OPG	
25	Construction	I	**Assign** welders, **Verify** Welders Qualifications are current and a copy of the welders tickets and if required the continuity log is placed in the CWP.	EC #120421 QCP 505.10 QCP 509.35 WI Opn 200.6.5, 200.6.15, 200.6.26, 200.6.39, 200.6.52, 200.6.62, 200.6.63, 200.6.64, 200.6.65, 200.6.69, 200.6.76, 200.6.84, 200.6.94, 200.6.109, 200.6.122, 200.6.136, 200.6.147	Welder's qualified to ASME Sect. IX and **W013** Welder Qualification Log	**TSSA Welder's Tickets** and **W013** Welder Qualification Log	V				
	QA/QC	I	**Verify** Welders Qualifications are current and a copy is attached to the CWP.				D				
30	Construction	I	**Drill** and **Torque** Hanger using a calibrated wrench and the specified **Anchor Bolts.** As per the support installation detail and the manufacturers installation procedure.	EC#120421 Support Installation Details Hilti Installation Procedure WI Opn 200.7.12, 200.6.13, 200.6.14, 200.6.22, 200.6.23, 200.6.24, 200.6.25, 200.6.33, 200.6.34, 200.6.35, 200.6.36, 200.6.46, 200.6.47, 200.6.48, 200.6.49, 200.6.90, 200.6.91, 200.6.92, 200.6.93, 200.6.104, 200.6.105, 200.6.106, 200.6.107, 200.6.130	EC#120421 Support Installation Details Hilti Installation Procedure	**M-11** Torque Record	V				
	QA/QC	I	**Verify** and **Document** the **Anchor Bolts** are **Installed** and **Torqued** correctly As per the support installation detail and the manufacturers installation procedure.				D				

Inspection and Test Plan Number	A00004-M6-120421-TS-01-04	Revision Number	0

Operation			Description	Controlling Document	Acceptance Criteria	History Docket	Inspection Point				Comments
No.	Department	Location Code					Aecon	Client	A.I./A.N.I	OPG	
35	Construction	I	**Install** supports per the requirements of the support installation detail **Transfer** Heat Numbers prior to cutting material **Perform** welding operations in accordance with weld details on support installation details and Welding Procedure Specification 11-21-N4A	EC #120421, QCP 509.59, 509.8 WPS # 11-21-N4A, WI Opn 200.6.4 & 200.6.6, 200.6.7, 200.6.8, 200.6.16, 200.6.17, 200.6.18, 200.6.27, 200.6.28, 200.6.29, 200.6.38, 200.6.40, 200.6.41, 200.6.42, 200.6.51, 200.6.53, 200.6.54, 200.6.55, 200.6.56, 200.6.61, 200.6.70, 200.6.71, 200.6.72, 200.6.77, 200.6.78, 200.6.79, 200.6.81, 200.6.82, 200.6.83, 200.6.85, 200.6.86, 200.6.87, 200.6.95, 200.6.96, 200.6.99, 200.6.100, 200.6.101, 200.6.110, 200.6.111, 200.6.112, 200.6.115, 200.6.116, 200.6.121, 200.6.123, 200.6.124, 200.6.125, 200.6.138, 200.6.139, 200.6.140, 200.6.141, 200.6.142, 200.6.149, 200.6.150, 200.6.151, 300.6.84	EC #120421 Support Installation Drawing ASME B31.1 Clause 136.4.2 WPS # 11-21-N4A	Weld Map / As Built Drawing	H V D			V	HG 930/ HG 931 and HG 932 to HG 937 installed under CWP A00004-M6-120421-W38002 IC Nov 24/21
	QA/QC	I	**Verify** Heat Numbers have been transfered prior to cutting material **Aecon QC** to perform a **Visual** NDE **Inspection of Welds** to **Verify** and **Document** conformance to support installation details and Weld Procedure Aecon WPS #11-21-N4A								

Inspection and Test Plan Number	A00004-M6-120421-TS-01-04	Revision Number	0

Operation			Description	Controlling Document	Acceptance Criteria	History Docket	Inspection Point				Comments
No.	Department	Location Code					Aecon	Client	A.I./A.N.I	OPG	
			Installation of Piping Spools # 01-1J, pipe and fittings As per NK38-DRAW-38009-10001 INSTALLED UNDER ORIGINAL CWP A00004-M6-120421-W39001 A00004-M6-120421-W39003 A00004-M6-120421-W39002								JT 25 Nov 2016
			0-38110-L486-D2 ANC, 0-38110-L436-D2 ANC NK38-DRAW-38110-10025-0002 Table 4 CRN NA-38-3811.5 ADD15 (Final)								
			Installation of Piping Spools # 03-3A, 03-3B, 03-3C, 03-3D, 03-3E, 03-3F, As per NK38-DRAW-38009-10003 INSTALLED UNDER ORIGINAL CWP A00004-M6-120421-W39001 A00004-M6-120421-W39003								JT 25 Nov 2016
			0-38110-L486-D2 ANC NK38-DRAW-38110-10025-0002 Table 4 CRN NA-38-3811.5 ADD15 (Final)								
			Installation of Piping Spools # 05-1A, 05-1B, 05-1C, 05-1D, 05-1E, 05-1F, 05-1G, 05-1H, 05-1J, 05-1K, 05-1L, 05-1M, 05-1N, 05-1P, 05-1Q, 05-1R, 05-1S, 05-1T, 05-1U pipe and fittings As per NK38-DRAW-38009-10005 INSTALLED UNDER ORIGINAL CWP A00004-M6-120421-W39003								JT 25 Nov 2016
			0-38110-L436-D2 ANC, 0-38110-L437-D2 ANC, 0-38110-L438-D2 ANC, 0-38110-L439-D2 ANC, 0-38110-L441-D2 ANC, 0-38110-L442-D2 ANC, 0-38110-L443-D2 ANC NK38-DRAW-38110-10025-0002 Table 4 CRN NA-38-3811.5 ADD15 (Final)								
			Installation of Piping Spools # 42-5A, 42-5B, Pipe and Fittings As per NK38-DRAW-38009-10042 INSTALLED UNDER ORIGINAL CWP A00004-M6-120421-D39101								JT 25 Nov 2016
			0-38110-L486-D2 ANC NK38-DRAW-38110-10025-0002 Table 4 CRN NA-38-3811.5 ADD15 (Final)								
			Installation of Piping Spools # 43-5A As per NK38-DRAW-38009-10043 INSTALLED UNDER ORIGINAL CWP A00004-M6-120421-D39201								JT 25 Nov 2016
			0-38110-L486-D2 ANC NK38-DRAW-38110-10025-0002 Table 4 CRN NA-38-3811.5 ADD15 (Final)								
			Installation of Piping Spools # 47-4A, 47-4B, 47-4C, 47-4D, 47-4E, 47-4F, 47-4G, 47-4H, 47-4J, 47-4K, 47-4L, pipe and fittings As per NK38-DRAW-38009-10047 INSTALLED UNDER ORIGINAL CWP A00004-M6-120421-D39001								JT 25 Nov 2016
			0-38110-L486-D2ANC, 0-38110-L707-D1/2ANC, 0-38110-L708-D1/2ANC NK38-DRAW-38110-10025-0002 Table 4 CRN NA-38-3811.5 ADD15 (Final)								

Inspection and Test Plan Number	A00004-M6-120421-TS-01-04	Revision Number	0

Operation			Description	Controlling Document	Acceptance Criteria	History Docket	Inspection Point				Comments
No.	Department	Location Code					Aecon	Client	A.I./A.N.I	OPG	
40	Construction	I	**Locate** and identify correct location for piping spools and field installed valves	Applicable piping isometric drawing WI Opn 300.6.1, 300.6.2, 300.6.14, 300.6.15, 300.6.26, 300.6.27, 300.6.44, 300.6.45, 300.6.57, 300.6.58, 300.6.70, 300.6.71, 300.6.86, 400.6.1, 400.6.2, 400.618, 400.6.19, 400.6.36, 400.6.37	Applicable piping isometric drawing	Q040 ITP	IC Nov 24/16 V				
	QC	I	> **Verify** correct location for piping spools and field installed valves								
45	Construction	I	**Assign** ASME Section IX qualified welders **Issue** required weld consumable as per WPS requirements as per QCP 505.10 **Ensure** weld consumable is utilized and stored as per customer specifications and QCP 505.10.	ASME Section IX Quality Manual QCP 505.10 QCP 509.59 WI Opn 300.6.5, 300.6.18, 300.6.30, 300.6.48, 300.6.61, 300.6.74, 300.6.89, 400.6.8, 400.6.23, 400.6.41, 600.6.6	Welder's qualified to ASME Sect. IX	**TSSA Welder's Tickets** **W013** Welder Qualification Log	JT 29 Nov 2016 V D		V		
	QC	I	**Verify** all welders are qualified in accordance to ASME sect. IX, material, O.D., and thickness and Process requirements.								
50	Construction	I	**Check Valve Inspection Prior to Installation** **Inspect** weld ends for signs of shipping damage and **ensure** any corrosion protection coatings have been removed. **Ensure** freedom of movement of the valve disc by manually cycling the disc. As per Manufacturers Installation Operation and Maintenance Manual	Manufacturer's Installation Operation and Maintenance Manual A00004-IOM-706088-10046 WI OPN 400.6.6, 400.6.7	Manufacturer's Installation Operation and Maintenance Manual A00004-IOM-706088-10046	**Q-10** Inspection Report	IC Nov 23/16 V D				
	QC	I	> **Verify** and **Document** pre-Installation Inspection of check valves has been carried out As per the Manufacturers Installation Operation and Maintenance Manual								

Inspection and Test Plan Number	A00004-M6-120421-TS-01-04	Revision Number	0

Operation			Description	Controlling Document	Acceptance Criteria	History Docket	Inspection Point				Comments
No.	Department	Location Code					Aecon	Client	A.I./A.N.I	OPG	
55	Construction	I	**Perform** FME solvent swab per the requirements for cleanliness code A for field fabricated piping spools and field installed valves **Perform** FME inspection to ensure internal surfaces of pipe and fittings are free of grease, dirt, scale, and other foreign material per the requirements of cleanliness code F before installation and clean as required.	N-PROC-MA-0018 QCP 510.9 WI Opn 300.6.6, 300.6.19, 300.6.31, 300.6.49, 300.6.62, 300.6.75, 300.6.90, 400.6.9, 400.6.27, 400.6.30, 400.6.45, 400.6.48, 600.6.11, 600.6.22, 600.6.27, 600.6.28, 600.6.31	N-PROC-MA-0018	**W 026** Field Weld Inspection Checklist **Q010** Inspection Report	IC Nov 23/16 W V			V*	Note: Requirements for cleanliness code A for shop fabricated spools is completed during fabrication in Cambridge
	QC	I	> **Perform** and **Document** second "As Left" FME inspection is completed prior to installation of Piping Spools. **Witness** solvent swab of piping components prior to installation of field fabricated piping spools and field installed valves				D				
60	Construction	I	**Ensure valves are in the open position prior to welding, or if valve manufacturers manual requires disassembly of valves prior to welding:** **Match mark** bonnet and body prior to ✓ disassembling valves **Disassemble** valves and place internals in the original packaging with dessicant, or if not provided, place in a bag. Label with the valve number. The container shall be placed in a secure location	Manufacturer's Installation Operation and Maintenance Manual A00004-IOM-708856_3-10058 A00004-IOM-718648_3-10136 A00004-IOM-708842_3-10057 QCP 510.9 WI OPN 400.6.24, 400.6.25, 400.6.26, 400.6.42, 400.6.43, 400.6.44	Manufacturer's Installation Operation and Maintenance Manual A00004-IOM-708856_3-10058 A00004-IOM-718648_3-10136 A00004-IOM-708842_3-10057 QCP 510.9	**Q010** Inspection Report	IC Nov 23/16 V D				
	QC	I	**Verify valve is in the open position prior to welding or if disassembly prior to welding is required by the valve installation manual:** **Verify** valve bonnet and body are match marked prior to disassembling valves **Verify** valve internals have been placed in a labelled container and placed in a secure location								

IB 202753 * FE To Verify copy of original W026 & Q010 Forms For 47-1 Series Spool.
24 Nov 16 In this ITP Close out.

Inspection and Test Plan Number	A00004-M6-120421-TS-01-04	Revision Number	0

Operation			Description	Controlling Document	Acceptance Criteria	History Docket	Inspection Point				Comments
No.	Department	Location Code					Aecon	Client	A.I./A.N.I	OPG	
65	Construction	I	**Fit Up**, Tack field welds as per drawing, customer specification, and code requirements. **Transfer** Heat Numbers prior to cutting material **Ensure** Valve Flow Direction and orientaion are as per Drawing for one directional valves	ISO Dwgs QCP 510.9 QCP 310.2 QCP 505.10 QCP 509.2 QCP 509.8 WPS 88-200-N12 WI Opn 300.6.7, 300.6.20, 300.6.32, 300.6.50, 300.6.63, 300.6.76, 300.6.85, 300.6.91, 300.6.97, 400.6.10, 400.6.12, 400.6.13, 400.6.28, 400.6.46, 600.6.7	Installation and welding meets codes, specs, and drawings ASME B31.1 QCP 310.2 WPS 88-200-N12	**W 026** Field Weld Inspection Checklist **Q010** Inspection Report	JC Dec 24/16 H				Heat No's transferred prior to subdivision JC Dec 24/16
	QC	I	> **Perform** FIT-UP **Inspection** and **Documentation** of all field welds as per WPS 88-200-N12 and QCP 310.2 Visual Inspection **Verify** Heat Numbers have been transferred prior to cutting material **Verify** Valve Flow Direction and orientaion are as per Drawing for one directional valves				D				Flow direction is correct Nos. [illegible] & [illegible]
70	Construction	I	**Ensure** spool slopes and dimensions are correct as per NK38-DRAW-38009-10002	QCP 510.9 WI Opn 300.6.8, 300.6.21, 300.6.33, 300.6.51, 300.6.64, 300.6.77, 300.6.92	Piping Isometric drawing	**W 026** Field Weld Inspection Checklist	JC Dec 24/16 V			V *	
	QC	I	> **Verify** spool slope and dimensions are correct as per NK38-DRAW-38009-10002								

AB 20/12/23 29-Nov 2016

* Spool 1-13 to be witnessed under ITP: A00004-M6-120421-WS0003

* FE To verify copy of original W026 for all spools in this ITP @ Closeout.

Inspection and Test Plan Number	A00004-M6-120421-TS-01-04	Revision Number	0

Operation			Description	Controlling Document	Acceptance Criteria	History Docket	Inspection Point				Comments
No.	Department	Location Code					Aecon	Client	A.I./A.N.I	OPG	
75	Construction	I	**WELDING** **Perform** field welds as per WPS 88-200-N12, drawing, customer specification, valve installation manual, and code requirements. **Ensure** welder ID is marked adjacent to the weld using low Halogen / Sulphur markers and record on weld map. **Ensure** interpass temperature remains below 300 Deg F throughout the welding process of check valves by use of an IR temp gun or tempilstik.	ISO Dwgs QCP 310.2 QCO 505.10 QCP 509.2 QCP 509.8 QCP 509.59 WPS 88-200- N12 ASME B31.1 - Table 136.4 WI Opn 300.6.9, 300.6.10, 300.6.22, 300.6.23, 300.6.34, 300.6.35, 300.6.52, 300.6.53, 300.6.65, 300.6.66, 300.6.78, 300.6.79, 300.6.93, 300.6.94, 400.6.11, 400.6.15, 400.6.29, 400.6.31, 400.6.47, 400.6.49, 600.6.3, 600.6.7, 600.6.8 Manufacturer's Installation Operation and Maintenance Manual A00004-IOM-706088-10046 N-PROC-MA-0018	Installation and welding meets codes, specs, and drawings. Manufacturer's Installation Operation and Maintenance Manual A00004-IOM-706088-10046 ASME B31.1 136.4.2	**Q012** System Inspection Report Weld Map	IC Nov 24/16 **H**				
	QC	I	> **Verify** that welding controls per QCP 509.59 & QCP 505.10 are complied with. > **Verify** purge dams removed after completion of welding and recorded on FME accountability log > **Perform** visual inspection of all completed welds and **Document** results . > **Verify** completed weld map matches field conditions.				**V** **D**		✓	✓*	
80	Construction	I	**Weld Repair - IF Required:** If weld(s) fail inspection, remove defect(s)/ repair as per subsequently raised repair ITP	ISO Dwgs QCP 510.8 QCP 405.16 QCP 501.1 WI Opn 300.6.11, 300.6.24, 300.6.36, 300.6.54, 300.6.67, 300.6.80, 300.6.95, 400.6.16, 400.6.32, 400.6.50	Repair ITP (Q040E)	Repair ITP **(Q0404E)** NCR (Closed)	N/A IC Nov 24/16 **H**				No Repairs Required
	QC	I	If repairs of welds are required, raise NCR and weld Repair ITP (if required).				**D**				

IB 2021-05-07 21 Nov 18 * FE To verify Copy of original Q012 Forms + Weld maps @ ITP Close out For 47-4 series spools

Inspection and Test Plan Number	A00004-M6-120421-TS-01-04	Revision Number	0

Operation			Description	Controlling Document	Acceptance Criteria	History Docket	Inspection Point				Comments
No.	Department	Location Code					Aecon	Client	A.I./A.N.I	OPG	
85	Construction	I	**Reinstall** valve internals and **torque** valve bonnet to body per match marks and the requirements of the Manufacturers Installation Operation and Maintenance Manual **Perform** FME inspection to ensure internal surfaces of pipe and fittings are free of grease, dirt, scale, and other foreign material per the requirements of cleanliness code F before installation and clean as required.	Manufacturer's Installation Operation and Maintenance Manual A00004-IOM-708856_3-10058 A00004-IOM-718648_3-10136 A00004-IOM-708842_3-10057 QCP 510.9 WI OPN 400.6.33, 400.6.34, 400.6.51, 400.6.52 N-PROC-MA-0018	Manufacturer's Installation Operation and Maintenance Manual A00004-IOM-708856_3-10058 A00004-IOM-718648_3-10136 A00004-IOM-708842_3-10057 QCP 510.9	**M-011** Torque Record **Q010** Inspection Report	V				TORQUE RECORDED ON PUNCH LIST. FINAL TORQUE TO BE VERIFIED AND RECORDED TO SOFTSEY PUNCH. JT 25 Nov 2016
	QC	I	**Verify** the valve bonnet is reinstalled according to the match marks and torqued to the requirements of the Manufacturers Installation Maintenance Manual **Perform** and **Document** second "As Left" FME inspection is completed prior to installation of valve bonnets.				D				
90	Construction	I	**Install** U-Bolts, shields and banding on all pipe supports. **Ensure** all threaded fasteners are locked, As Per N-STM-01110-10009.	N-STM-01110-10009 WI Opn 200.6.19, 200.6.30, 200.6.43, 200.6.57, 200.6.97, 200.6.113, 300.6.12, 300.6.37, 300.6.55, 300.6.56, 300.6.68, 300.6.69, 300.6.81, 300.6.82, 300.6.96	NK38-DRAW-38009-10001 N-STM-01110-10009	**Q010** Inspection Report	V			✓*	
	QA/QC	I	**Verify** and **Document** U-Bolts, shields and banding have been installed (All supports) **Verify and Document** all threaded fasteners are locked As Per N-STM-01110-10009.				D				

JB 24 NOV 2016

* FE To verify ubolts & shields are installed for spool 43-54 only & [illegible] spools
* FE To verify ubolts locked for spool 43-54 only

Inspection and Test Plan Number	A00004-M6-120421-TS-01-04	Revision Number	0

Operation			Description	Controlling Document	Acceptance Criteria	History Docket	Inspection Point				Comments
No.	Department	Location Code					Aecon	Client	A.I./A.N.I	OPG	
95	QA/QC	I	**Perform pre-hydrotesting walkdown to identify pressure boundary deficiencies**	ISO Dwgs N286 Quality Manual EPC Projects QCP 309.67 QCP 510.9 WI OPN 500.6.1	ISO Dwgs N286 Quality Manual EPC Projects QCP 510.9	Q-010 Inspection Report G 008 Punch List Form	H V D	SLN H	V	W	PUNCH LIST ITEMS TO BE CLOSED AFTER HYDRO PRIOR TO CLOSEOUT JT 25 NOV 2016
	Construction	I	**Correct** all outstanding pressure boundary deficiencies identified on Punch List(s) in a timely manner to maintain project schedule and notify QA/QC of work completion.								
	QA/QC	I	**Verify** all identified **pressure boundary** deficiencies are rectified and signed off the Punch List(s). **Verify** all NDE has been Completed **Verify** all NCR's are closed **Verify** all inspeections have been completed and signed off								
100	Construction	I	**PRESSURE TESTING** **Ensure** any equipment that may be damaged by the test pressure is removed or isolated prior to pressure testing. **Perform** pressure test on piping system in accordance with QCP 310.36 for hydrostatic testing of piping. **Test Pressure: 305 Psi(g) (2100Kpa(g))** **Test Medium: Water** **Test Temperature: Ambient** **Test Duration: Minimum of 10 Minutes** **DRAW-38110-10025-0002**	NK38-DRAW-38110-10025-0002 QCP 310.36 WI OPN 600.6.9, 600.6.10, 600.6.12, 600.6.13, 600.6.15, 600.6.16, 600.6.19, 600.6.20, 600.6.21	NK38-DRAW-38110-10025-0002 QCP 310.36	Q-006 Pressure Test Report	H W D	SLN TE QS SLN H	NOV 29 16	24 NOV 2016 W	
	QC	I	**Verify** and **Document** pressure gauge serial number and confirm calibration records are within two weeks of test date **Witness** pressure test on piping system in accordance with QCP 310.36 for hydrostatic testing of piping. **Examine** all joints and connections to **ensure** there are no leaks								

INSPECTION AND TEST PLAN

AECON

Prepared by	Derek McChesney	Date	21-Jun-2016	A.I./A.N.I. Approval		Date	AUG 11 2016
QA Approval		Date		Client Approval		Date	28-JUNE-2016
PM Approval		Date	27-JUN-16.				

Customer reference	OPG Darlington NGS - D2O Project, OPG WO #02910081
Aecon Industrial Reference	Project # A00004
Quality Reference	Aecon Industrial Quality Assurance Manual, N286 Quality Assurance Manual Fabrication Supplement, N286 Quality Assurance Manual EPC Projects, B51 Manual, Issue 4, CSA N285 -08 Update 2, CSA B51-2009, Update 1, ASME B31.1 2010
System	MEC #119824, EC #120402 Rev 002 Cut & Cap Existing Line in in HWMB Bldg.
Drawing number	NK38-DOH-38009-0008 CRN NA38-3811.5 ADD Design Pres. 2000 kPa Temp. 68°C
Inspection and Test Plan Number	A00004-M6-120402-D22001 — Revision Number: 0

Operation			Description	Controlling Document	Acceptance Criteria	History Docket	Inspection Point				Comments
No.	Department	Location Code					Aecon	Client	A.I./A.N.I	OPG	
5	QA/QC	I	**Verify** received materials are free from damage and deterioration and material identification, grade, and size is compliant and traceable to supplied documentation. If any material is found to be unacceptable or has lost traceability, an NCR and /or OS&D Release to field for installation.	N286 QA Manual Section 3 Subsection 3.10 EC #120402 QCP 501.1 QCP 505.7 QCP 509.8 QCP 509.17 QCP 509.49	Meets Drawings, BOM, EC #120402 QCP 505.7 QCP 509.17 QCP 509.49 QCP 501.1	MTR / C of C N014 Q001 Q002	23 SEP 16 V D		AW. 29/16		
10	Construction	I	**Prior to Execution** **Ensure** All Calibrated Equipment has a valid and current calibration sticker attached, and a valid and current copy of a calibration certificate has been placed in this CWP. All measurements are completed, recorded and peer verified.	EC #120402 QCP 311.0 WI Opn 104.6	Meets EC #120402 QCP 311.0	This ITP	27-SEP-16 V				
	QA/QC	I	**Verify** all Calibrated Equipment (if required) has a valid and current Calibration Sticker attached, and a valid and current copy of the Calibration Certificate has been placed in this CWP.								
15	Construction	I	**Notify AECON QC prior to the start of work.** Compile, Stage all relevant and required, Parts, Permits, Equipment and Drawings	Drawings, EC #120402 WI Opn 102.4, 103	Meets EC #120402	This ITP	23-SEP-16 V				
	QA/QC	I	Verify all required Drawings, Parts, Permits and Equipment is compiled and staged.								

Inspection and Test Plan Number	A00004-M6-120402-D22001	Revision Number	0

Operation No.	Department	Location Code	Description	Controlling Document	Acceptance Criteria	History Docket	Inspection Point: Aecon	Inspection Point: Client	Inspection Point: A.L/A.N.I	Inspection Point: OPG	Comments
WORK EXECUTION - PRE INSTALLATION											
20	Construction	I	**Assign** ASME Section IX qualified welders **Issue** required weld consumable as per WPS requirements as per QCP 505.10 **Ensure** weld consumable is utilized and stored as per customer specifications and QCP 509.59.	ASME Section IX Quality Manual QCP 505.10 QCP 509.59	Welder's qualified to ASME Sect. IX	**TSSA Welder's Tickets**	V D				
	QC	I	**Verify** all welders are qualified in accordance to ASME sect. IX, material, O.D., and thickness requirements.	WI 200.9.3							
25	Construction	I	**FITUP** **Verify** use of low halogen / Sulphur markers **Verify** all measurements prior to fabrication. **Ensure** internal surfaces of pipe/tube and fittings are free of grease, dirt, scale, and other foreign material before assembly and clean as required. **Ensure** traceability has been transferred to all on all cut pieces **Remove** bonnet and diaphragm from valve **V940** **Fit, tack** as per drawing, customer specification, and code requirements.	ISO Dwgs QCP 310.2 QCP 505.10 QCP 509.2 QCP 509.8 QCP 509.59 WPS 88-200-N12 WI 200.9.1 & 200.9.4	Installation and welding meets codes, specs, and drawings.	**Q010** Inspection Report **Q012** System Inspection Report	V D				
	QC	I	> **Verify** use of low halogen / Sulphur markers > **Verify** as-built dimensions > **Verify** internal cleanliness is being maintained throughout fabrication process > **Verify** traceability has been transferred to all on all cut pieces > **Verify** bonnet and diaphragm have been removed from valve prior to fit up and welding activities > **Perform** fit-up inspection/documentation of all butt welds								

Inspection and Test Plan Number	A00004-M6-120402-D22001						Revision Number	0			
Operation			Description	Controlling Document	Acceptance Criteria	History Docket	Inspection Point				Comments
No.	Department	Location Code					Aecon	Client	A.I./A.N.I	OPG	
30	Construction	I	**WELDING** **Perform** spool piece welds as per WPS, drawing, customer specification, and code requirements. **Ensure** welder ID is marked adjacent to the weld using halogen free markers and record on weld map.	ISO Dwgs QCP 310.2 QCO 505.10 QCP 509.2 QCP 509.8 QCP 509.35 QCP 509.59 WPS 88-200-N12 ASME B31.1 - Table 136.4 WI 200.9.4 & 200.9.5	Installation and welding meets codes, specs, and drawings. ASME B31.1 136.4.2	**Q012** System Inspection Report **W014** Weld Monitoring Checklist Weld Map	H 26-SEP-16 V D		V NOV.29/16		& 10% requirement partially CAPTURED Another QCP. 29/11/2016 based on QCP 509.03 (Clause 5.1) NOV.29/16
	QC	I	> **Verify** that welding controls per QCP 509.59 & QCP 505.10 are complied with. > **Verify** internal cleanliness is being maintained through fabrication process > **Perform** weld monitoring in accordance with QCP 509.35 > **Verify** purge dams removed after completion of welding > **Perform** visual inspection of all completed welds and document results on Q 012. > **Verify** completed weld map matches fabricated spool piece.								
35	Construction	I	**Weld Repair - IF Required:** If weld(s) fail inspection, remove defect(s)/ repair as per subsequently raised repair ITP	Quality Manual ISO Dwgs QCP 510.8 QCP 405.16 QCP 501.1	Repair ITP (Q040E)	Repair ITP (Q0404E) NCR (Closed)	H 26-SEP-16 D				N/A 26 NOV 16 BP NO REPAIR REQUIRED
	QC	I	If repairs of welds are required, raise NCR and weld Repair ITP (if required).								
40	Construction	I	**Re-Install** valve bonnet and diaphragm Torque bonnet components as per manufacturer's specifications **Operate** valve (fully open to fully closed) to verify freedom of movement	Manufacturer's Specifications / Documentation WI 200.9.6 & 200.9.7	Manufacturer's Specs./Docs.	**M011** Torque Report	H 27-SEP-16 V D		V Nov 29/16	V	RE-Torque Valve to new standard AT 135 Ft/lbs BP
	QC	I	> **Witness** and **Document** that bonnet components have been torqued as per manufacturer's specifications/documentation > **Witness** valve operation to verify freedom of movement.								

- Refer to NCR 165 and OPN 85 4/4/2016

Inspection and Test Plan Number	A00004-M6-120402-D22001	Revision Number	0

Operation No.	Department	Location Code	Description	Controlling Document	Acceptance Criteria	History Docket	Inspection Point: Aecon	Inspection Point: Client	Inspection Point: A.I./A.N.I	Inspection Point: OPG	Comments
45	Construction	I	**Install** equipment tag on **0-38110-V940** Complete form N-FORM-10407	N-PROC-OP-0034 WI 200.9.8 & 200.9.9	N-PROC-OP-0034	**N-FORM-10407**	26 Aug 16 V D				
	QC	I	> **Verify** and **Document** equipment tag is installed & applicable forms completed.								
50	Construction	I	**PRESSURE TESTING** **Ensure** any equipment that may be damaged by the test pressure is removed or isolated prior to pressure testing. **Perform** pressure test on piping system in accordance with QCP ~~410.7~~ 310.56 for hydrostatic testing of piping. **Test Pressure: As per Table 1 - NK38-F0H-38110-0001 (EC 120402)** *	Dwg NK38-F0H-38110-0001 310.56 QCP ~~410.7~~ WI 200.9.10	Installation and welding meets codes, specs, and drawings. NK38-F0H-38110-0001 (EC 120402) Test Tolerance (Pressure) +6% / -0% Only calibrated equipment used.	Calibration Records **Q 006** Pressure Test Report	H 5-Oct-16 D		N 12-Oct-2016 W	JW 2016 V 2016	
	QC	I	> **Verify** and **Document** pressure gauge serial number and confirm calibration records are within two weeks of test date > **Perform** pressure test on piping system in accordance with QCP ~~410.7~~ 310.56 for hydrostatic testing of piping.								
55	Construction	I	**Perform** FME inspection of pre-installed piping Install FME caps & covers	FME PLAN WI 200.9.12	FME PLAN	This ITP	26 Aug 16 V				
	QC	I	> **Perform** FME inspection of pre-installed piping > **Verify** FME caps & covers are installed								

* Test Pressure: 2100 kPag
304.7 Psig
Test Temperature: Ambient
Test Medium: Water
Test Duration: 10 min (minimum)
2016 Aug 16

Inspection and Test Plan Number	A00004-M6-120402-D22001	Revision Number	0

Operation No.	Department	Location Code	Description	Controlling Document	Acceptance Criteria	History Docket	Inspection Point: Aecon	Client	A.I./A.N.I	OPG	Comments
WORK EXECUTION - INSTALLATION											
60	Construction	I	**Locate** and identify correct location for tie-in point 0-38110-L4-D2ANC **Ensure** photos are taken of existing area prior to installation activities	Dwg NK38-D0H-38009-0008 WI 200.8	Dwg NK38-D0H-38009-0008	This ITP	V J.G 26-11-16				Take "As Found" Photos
	QC	I	> **Verify** correct location of tie-in point 0-38110--L4-D2ANC > **Ensure** photos are taken of existing area prior to installation activities								
65	Construction	I	**CUTTING - 0-38110-L4-D2ANC** **Verify** all measurements prior to cutting **Cut line** and Drain into catch containment	ISO Dwgs WI 200.10.1 200.10.2	Installation and welding meets codes, specs, and drawings.	ITP	H J.G 26-11-16				
	QC	I	> **Verify** all measurements prior to cutting. As per NK38-DOH-38009-0008								
70	Construction	I	**Perform** FME inspection to ensure internal surfaces of pipe and fittings are free of grease, dirt, scale, and other foreign material before installation and clean as required. ~~**Remove bonnet and diaphragm from valve V940**~~ J.G 11-26-16 **Assign** ASME Section IX qualified welders Issue required weld consumable as per WPS requirements as per QCP 505.10 **Ensure** weld consumable is utilized and stored as per customer specifications and QCP 509.59. **Fit, tack** as per drawing, customer specification, and code requirements.	ISO Dwgs QCP 310.2 QCP 505.10 QCP 509.2 QCP 509.8 QCP 509.59	Installation and welding meets codes, specs, and drawings.	**Q010** Inspection Report (FME) **Q012** System Inspection Report J.G 11-26-16 W026 J.G 11-26-16	V D				AS PER APPROVAL SEE EMAIL AT BACK OF ITP BC 28-NOV-16
	QC	I	> **Perform** and document second "As Left" FME inspection is completed prior to installation ~~> **Verify** bonnet and diaphragm have been removed from valve prior to fit up and welding activities~~ J.G 11-26-16 >**Verify** all welders are qualified in accordance to ASME sect. IX, material, O.D., and thickness requirements. > **Perform** fit-up inspection/documentation of all butt welds as per WPS 88-200-N12	WPS 88-200-N12 WI 200.10.3, 200.10.4 & 200.10.6							

Inspection and Test Plan Number	A00004-M6-120402-D22001	Revision Number	0

Operation			Description	Controlling Document	Acceptance Criteria	History Docket	Inspection Point				Comments
No.	Department	Location Code					Aecon	Client	A.I./A.N.I	OPG	
75	Construction	I	**WELDING** **Perform** field welds as per WPS 88-200-N12, drawing, customer specification, and code requirements. **Ensure** welder ID is marked adjacent to the weld using low halogen / Sulphur markers and record on weld map.	ISO Dwgs QCP 310.2 QCO 505.10 QCP 509.2 QCP 509.8 QCP 509.59 WPS 88-200-N12 ASME B31.1 - Table 136.4 WI 200.10.7 & 200.10.8	Installation and welding meets codes, specs, and drawings. ASME B31.1 136.4.2	**Q012** System Inspection Report Weld Map	V J.G 26.11.16 D		DN 26/16 V		
	QC	I	> **Verify** that welding controls per QCP 509.59 & QCP 505.10 are complied with. > **Verify** internal cleanliness is being maintained through fabrication process > **Verify** purge dams removed after completion of welding > **Perform** visual inspection of all completed welds and **Document** results . > **Verify** completed weld map matches field conditions.								
80	Construction	I	**Weld Repair - IF Required:** If weld(s) fail inspection, remove defect(s)/ repair as per subsequently raised repair ITP	ISO Dwgs QCP 510.8 QCP 405.16 QCP 501.1	Repair ITP (Q040E)	N/A Repair ITP **(Q0404E)** NCR (Closed)	J.G 26.11.16 H D				
	QC	I	If repairs of welds are required, raise NCR and weld Repair ITP (if required).								

Inspection and Test Plan Number	A00004-M6-120402-D22001					Revision Number	0				
Operation			Description	Controlling Document	Acceptance Criteria	History Docket	Inspection Point				Comments
No.	Department	Location Code					Aecon	Client	A.I./A.N.I	OPG	
85	Construction	I	~~Re-Install valve bonnet and diaphragm~~ 7.6 20-11-16 **Torque** bonnet components as per manufacturer's specifications **Operate** valve (fully open to fully closed) to verify freedom of movement **Leave** valve in closed position once freedom of movement is confirmed.	Manufacturer's Specifications / Documentation WI 200.10.9 200.10.10 200.10.11	Manufacturer's Specs./Docs.	**Q010** Inspection report **M011** Torque Report	V J.G. 27-11-16 D		NOV. 29/16 V		Take "As Left" Photos
	QC	I	> **Witness** and **Document** that bonnet components have been torqued as per manufacturer's specifications/documentation > **Verify** valve operation to verify freedom of movement. >**Ensure** "As Left" Photos have been taken								
90	Construction & QA/QC	I	**Perform Final Inspection** As per Z299.3	N286 Quality Manual EPC Projects QCP 309.67 QCP 310.2 QCP 510.9 WI Opn 200.10.12	N286 Quality Manual EPC Projects	**Q-010** Inspection Report (Visual inspection of Welds) **G 008** Punch List Form	J.G. 28-11-16 V D		NOV. 29/16 V		**Note:** *All Q012 reports to be incorporated as part of the final Q010 Form*
		I	**Verify** and **Document Final Inspection** As per Z299.3 **Aecon QC** and Construction and or Field Engineering will perform a **Final Walk Down Inspection** to **Ensure** final product completion and **Document** any deficiencies.								
95	Construction	I/C	**Notify** and co-ordinate with OPG for the operational pressure test in accordance with N285.0-08 Sect. 14.3	N285.0-08 Sect. 14.3 WI 200.10.9 Thru 200.10.13	N285.0-08 Sect. 14.3	**Q 006** Pressure Test Report	30 Nov 16 H D				
	QC	I/C	> **Perform** operational pressure test examination in accordance with N285.0-08 Sect. 14.3 > **Record** the identification of the instrumentation, its calibration status, and the pertinent pressure and temperature values								

SEP 17 2016

AECON

INSPECTION AND TEST PLAN

Prepared by	Sarah Girard	Date	26-Aug-2016	A.I./A.N.I. Approval		Date	~~SEP 1 1 2016~~
QA Approval		Date	Aug 30/16	Client Approval		Date	Sep 2, 2016
PM Approval		Date	8/31/16				

Customer reference	OPG Darlington NGS - D2O Project, OPG WO #03013254
Aecon Industrial Reference	Project # A00004
Quality Reference	Aecon Industrial Quality Assurance Manual, N286 Quality Assurance Manual EPC Projects, B51 Manual, Issue 4, CSA N285 -08 Update 2, ASME-B31.1 2010
System	MEC # 88528 Rev 001, EC #120421 Rev 003,Tie-In Part B : Class 6 pipe Cut and Cap Existing Line in Existing HWMB Bldg-Process Lines.
Drawing number	See work package Document Log for Latest Approved Drawing List (EC #120421 Rev 003)
Inspection and Test Plan Number	A00004-M6-120421-D25001
Revision Number	0

Operation			Description	Controlling Document	Acceptance Criteria	History Docket	Inspection Point				Comments
No.	Department	Location Code					Aecon	Client	OPG	A.I./A.N.I	
5	QA/QC	I	Verify received materials are free from damage and deterioration and material identification, grade, and size is compliant and traceable to supplied documentation. If any material is found to be unacceptable or has lost traceability, an NCR and /or OS&D Release to field for installation.	N286 QA Manual Section 3 Subsection 3.10 EC #120421 QCP 501.1 QCP 505.7 QCP 509.8 QCP 509.17 QCP 509.49 WI Opn 103.2	Meets Drawings, BOM, EC #120421 QCP 505.7 QCP 509.17 QCP 509.49 QCP 501.1	MTR / C of C N014 Q001 Q002	30 Aug 2016 N/A H D			(See Note 1) H* Nov. 29/16	*TSSA note = All related CWPs have been completed. SEP 17 2016
10	Construction	I	**Notify AECON QC prior to the start of work.** Compile, Stage all relevant and required, Parts, Permits, Equipment and Drawings	Drawings, EC #120421 WI Opn 102.4, 102.4	Meets EC #120421	This ITP	30 Aug 2016			(See Note 2) H* Nov. 29/16	* TSSA Hold Point to confirm System Pressure Tests have been satisfied. SEP 17 2016
	QA/QC	I	Verify all required Drawings, Parts, Permits and Equipment is compiled and staged.								

Note 1 : Confirmed CWP completion & of op. #95 from CWP # A00004-M6-120421-D22001/R.0. (Authorized to proceed to Part B.)
Note 2 : Confirmed the first segment of pr. test completed on Nov. 25, 2016.

Form Number Q 040 - RWPB Rev 0

Inspection and Test Plan Number			A00004-M6-120421-D25001				Revision Number		0		
Operation			Description	Controlling Document	Acceptance Criteria	History Docket	Inspection Point				Comments
No.	Department	Location Code					Aecon	Client	OPG	A.I./A.N.I	
Connection of Line 38110-L486-D2ANC, ISO Drawing: NK38-DRAW-38009-10047 Flow Diagram:NK38-DRAW-38110-10025-002, TABLE 4, CRN: NA-38-3811.5 ADD15 (Provisional) Related to Package Part A: A00004-M6-120402-D22001 for Piping Installation +A00004-M6-120421-D39001											
85	Construction	I	**Locate, Isolate and apply Lock Out** , Tag Out on Line L486 Valve V 940 as per Drawing NK38-DRAW-38009-10047	NK38-DRAW-38009-10047 WI Opn 203.1	Dwg NK38-DRAW-38009-10047	this ITP	30Nov16 D				
	QC	I	**Verify** LOTO was performed on Line 486								
90	Construction	I	**Remove** the Cap from end of Tie In	Dwg NK38-DRAW-38009-10047 WI Opn 203.2	Dwg NK38-DRAW-38009-10047	This ITP	30Nov16 V				
	QC	I	>**Ensure** that Cap was removed								
95	Construction	I	**Perform** FME inspection to ensure internal surfaces of pipe and fittings are free of grease, dirt, scale, and other foreign material before installation and clean as required.	N-PROC-MA-0018 QCP 510.9 WI Opn 203.4	N-PROC-MA-0018	W 026 Field Weld Inspection Checklist Q-10 Inspection Report	30Nov16 H				
	QC	I	**Perform** and **Document** second "As Left" FME inspection is completed prior to installation of Piping Spools.				D				
100	Construction	I	**Fit Up, Tack Piping Spools** ,as per drawing, customer specification, and code requirements.	ISO Dwgs QCP 510.9 QCP 310.2 QCP 505.10 QCP 509.2 QCP 509.6 QCP 510.8 WPS 88-200-N12 WI Opn 203.3	Installation and welding meets codes, specs, and drawings. QCP 310.2 QCP 510.9	W 026 Field Weld Inspection Checklist Q-10 Inspection Report	30Nov16 H				
	QC	I	> **Perform** FIT-UP **Inspection** and **Documentation** of all butt welds as per WPS 88-200-N12				D				

Inspection and Test Plan Number			A00004-M6-120421-D25001				Revision Number		0		
Operation			Description	Controlling Document	Acceptance Criteria	History Docket	Inspection Point				Comments
No.	Department	Location Code					Aecon	Client	OPG	A.I./A.N.I	
105	Construction	I	**WELDING** **Perform** field welds as per WPS 88-200-N12, drawing, customer specification, and code requirements. **Ensure** welder ID is marked adjacent to the weld using low Halogen / Sulphur markers and record on weld map.	ISO Dwgs QCP 510.9 QCO 505.10 QCP 509.2 QCP 509.8 QCP 509.59 QCP 310.2 WPS 88-200-N12 ASME B31.1 WI Opn 203.5&203.6	Installation and welding meets codes, specs, and drawings. ASME B31.1 136.4.2 QCP 310.2 QCP 510.9	**Q-10** Inspection Report Weld Map /As Built Drawing **Q012** System Inspection Report Weld Map **W14**-Weld Monitoring Checklist	H V D			V	
	QC	I	> **Verify** that welding controls per QCP 509.59 & QCP 505.10 are complied with. > **Verify** purge dams removed after completion of welding > **Perform** visual inspection of all completed welds and **Document** results . > **Verify** completed weld map matches field conditions.								

INSPECTION AND T T PLAN

AECON

Prepared by	Sarah Girard	Date	13-Sep-2016	A.I./A.N.I. Approval		Date	NOV 14 2016
QA Approval		Date	SEPT 7/16	Client Approval		Date	Sep 30, 2016
PM Approval		Date					

Customer reference	OPG Darlington NGS - D2O Project, OPG WO #3013254
Aecon Industrial Reference	Project # A00004
Quality Reference	Aecon Industrial Quality Assurance Manual, N286 Quality Assurance Manual EPC Projects, B51 Manual, Issue 4, CSA N285 -08 Update 2, ASME-B31.1 2010
System	MEC #88528 Rev. 001 EC #120421 Rev. ~~003~~ 004 Installation of CLASS 6 Tank Connections in West Annex (All Areas) 24/OCT/16
Drawing number	Flow Diagrams, Design Pressures, Temperatures, and CRN will be indicated for each Isometric Drawing or Line, FICREQ24 Apply to this Package, FICREQ33
Inspection and Test Plan Number	A00004-M6-120421-W41001
Revision Number	0

Operation No.	Department	Location Code	Description	Controlling Document	Acceptance Criteria	History Docket	Inspection Point: Aecon	Client	A.I./A.N.I	OPG	Comments
5	QA/QC	I	**Verify** received materials are free from damage and deterioration and material identification, grade, and size is compliant and traceable to supplied documentation. If any material is found to be unacceptable or has lost traceability, an NCR and /or OS&D Release to field for installation.	N286 QA Manual Section 3 Subsection 3.10 EC #120421 QCP 501.1 QCP 505.7 QCP 509.8 QCP 509.49 WI Opn 103.2, 200.6.3, 200.6.19, 200.6.41, 200.6.57, 200.6.73	Meets Drawings, BOM, EC #120421 QCP 505.7 QCP 509.17 QCP 509.49 QCP 501.1	MTR / C of C N014	H D		W*	V	* PB items only. D2O Tank & Relief Devices PIS notify OPG PB Specialist to meet PVTS. RV & certification Requirements
10	Construction	I	**Notify AECON QC prior to the start of work.** Compile, Stage all relevant and required, Parts, Permits, Equipment and Drawings	Drawings, EC #120421 WI Opn 102.4 & 103.1 102.3	Meets EC #120421	This ITP	V				
	QA/QC	I	> **Verify** all required Drawings, Parts, Permits and Equipment is compiled and staged.								

Form Number Q 040 Rev 2

Inspection and Plan Number	A00004-M6-120421-W41001	Revision Number	0

Operation							Inspection Point				
No.	Department	Location Code	Description	Controlling Document	Acceptance Criteria	History Docket	Aecon	Client	A.I./A.N.I.	OPG	Comments
15	Construction	I	**Prior to Execution** **Ensure** All Calibrated Equipment has a valid and current calibration sticker attached, and a valid and current copy of a calibration certificate has been placed in this CWP. All measurements are completed, recorded and peer verified.	EC #120421 QCP 311.0 WI Opn 104.6	Meets EC #120421 QCP 311.0	This ITP	V				
	QA/QC	I	> **Verify** all Calibrated Equipment (If required) has a valid and current Calibration Sticker attached, and a valid and current copy of the Calibration Certificate has been placed in this CWP.								
20	Construction	I	**Ensure** Hydrotesting as per A00004-M-120421-T5001 has been completed and All Pipe are Cleaned, Drained and Dried Before Tie -in to the Tank	EC #120421 WI Opn 200.6.2,200.6.3, 200.6.18, 200.6.19, 200.6.40, 200.6.41, 200.6.56 200.6.57, 200.6.72 200.6.73	N-PROC-MA-0018 A&F (A &F)	This ITP	H		H	H	* REFER TO A00004-RFI-1034 [illegible] 11/12/16 & FOR 1" & greater [illegible] 11/17/16
	QA/QC	I	> **Verify** that Hydrotesting as per A00004-M-120421-T5001 has been completed and All Pipe are Cleaned, Drained and Dried Before Tie -in to the Tank				D				

Inspection and Test Plan Number	A00004-M6-120421-W41001	Revision Number	0

Operation			Description	Controlling Document	Acceptance Criteria	History Docket	Inspection Point				Comments
No.	Department	Location Code					Aecon	Client	A.I./A.N.I.	OPG	
Field weld of previously Installed Pipe Spool # 05-1A to Tank 21 FW01 & FW32,Pipe#: L443-D2ANC Field weld of previously Installed Pipe Spool # 05-1D to Tank 20 FW05 & FW34,Pipe#: L442-D2ANC Field weld of previously Installed Pipe Spool # 05-1F to Tank 19 FW07 & FW36,Pipe#: L441-D2ANC Field weld of previously Installed Pipe Spool # 05-1K to Tank 18 FW14 & FW38,Pipe#: L440-D2ANC Field weld of previously Installed Pipe Spool # 05-1N to Tank 17 FW18 & FW42,Pipe#: L439-D2ANC Field weld of previously Installed Pipe Spool # 05-1L to Tank 16 FW16,Pipe#: L438-D2ANC Field weld of previously Installed Pipe Spool # 05-1P to Tank 15 FW22 & FW44,Pipe#: L437-D2ANC Field weld of previously Installed Pipe Spool # 05-1T to Tank 14 FW26 & FW30,Pipe#: L436-D2ANC Isometric Drawing: NK38-DRAW-38009-10005 Flow Diagram:NK38-DRAW-38110-10025-0002, Table 4, CRN Number : NA-38-3811.5. ADD 15 (Provisional)											
65	Construction	I	**Locate** and identify correct tagging and location for piping spools.	Dwg NK38-DRAW-38009-10005 WI Opn 200.6.17 & 200.6.20	Dwg NK38-DRAW-38009-10005	This ITP	V				
	QC	I	> **Verify** correct tagging and location for piping spools and verify that Heat Number are transferred to each piping prior to cutting and Perform dimensional inspection after cutting								
70	Construction	I	**Assign** ASME Section IX qualified welders **Issue** required weld consumable as per WPS requirements as per QCP 505.10 **Ensure** weld consumable is utilized and stored as per customer specifications and QCP 505.10.	ASME Section IX Quality Manual QCP 505.10 QCP 509.59 WI Opn 200.6.24	Welder's qualified to ASME Sect. IX	**TSSA Welder's Tickets**	V D		V		
	QC	I	> **Verify** all welders are qualified in accordance to ASME sect. IX, material, O.D., and thickness and Process requirements.								
75	Construction	I	**Match mark** bonnet and body prior to disassembling valves	QCP 510.9 WI Opn 200.6.25	QCP 510.9	This ITP	V D			V	
	QC	I	**Verify** valve bonnet and body are match marked prior to disassembling valves								

Inspection and Test Plan Number	A00004-M6-120421-W41001	Revision Number	0

Operation			Description	Controlling Document	Acceptance Criteria	History Docket	Inspection Point				Comments
No.	Department	Location Code					Aecon	Client	A.I./A.N.I.	OPG	
80	Construction	I	**Disassemble** valves and place internals in the original packaging with desiccant, or if not provided, place in a bag. Label with the valve number. The container shall be placed in a secure location	QCP 510.9 WI Opn 200.6.27 200.6.26	Manufacturer's Installation Operation and Maintenance Manual A00004-IOM-718648_3-10136	This ITP	V				
	QC	I	**Verify** valve internals have been placed in a labelled container and placed in a secure location				D				
85	Construction	I	**Perform** FME inspection to ensure internal surfaces of pipe and fittings are free of grease, dirt, scale, and other foreign material before installation and clean as required.	N-PROC-MA-0018 A&F QCP 510.9 WI Opn 200.6.28	N-PROC-MA-0018 A&F	**Q010** Inspection Report (FME) **W 026** Field Weld Inspection Checklist	EYE OK Kat L443 H 28Nov16	EW9 EW32		W* 1B3 2024153 28Nov2016	* L443 only
	QC	I	> **Perform** and **Document** second "As Left" FME inspection is completed prior to installation of Piping Spools.				D				
90	Construction	I	**Transfer** marking prior to cutting Pipe Fabrication and Cut Pipe to appropriate Length **Fit Up, Tack Piping Spools, Pipe and valve** as per drawing, customer specification, code requirements and Manufacturer's Installation Operation and Maintenance Manual A00004-IOM-718648_3-10136	ASME B31.1 ISO Dwgs QCP 310.2 QCP 510.9 QCP 505.10 QCP 509.2 QCP 509.8 QCP 509.59 WPS 88-200-N12 Opn WI 200.6.29	Installation and welding meets codes, specs, and drawings. Manufacturer's Installation Operation and Maintenance Manual A00004-IOM-718648_3-10136	**W 026** Field Weld Inspection Checklist **Q010** Inspection Report	H				
	QC	I	> **Verify** that Heat Number are transferred to each piping prior to cutting and Perform dimensional inspection after cutting > **Perform** FIT-UP **Inspection** and **Documentation** and valve of all butt welds as per WPS 88-200-N12, QCP 310.2 Visual Inspection and Manufacturer's Installation Operation and Maintenance Manual A00004-IOM-718648_3-10136				D				

Inspection and Test Plan Number	A00004-M6-120421-W41001	Revision Number	0

Opera. No.	Department	Location Code	Description	Controlling Document	Acceptance Criteria	History Docket	Inspection Point: Aecon	Inspection Point: Client	Inspection Point: A.I./A.N.I.	Inspection Point: OPG	Comments
95	Construction	I	**Ensure** spool slopes and dimensions are correct as per NK38-DRAW-38009-10005	QCP 510.9 WI Opn 200.6.30	Dwg NK38-DRAW-38009-10005	This ITP	V				
	QC	I	> **Verify** spool slope and dimensions are correct as per NK38-DRAW-38009-10005								
100	Construction	I	**WELDING** **Perform** field welds as per WPS 88-200-N12, drawing, customer specification, and code requirements. **Ensure** welder ID is marked adjacent to the weld using low Halogen / Sulphur markers and record on weld map.	ISO Dwgs QCP 310.2 QCP 510.9 QCP 505.10 QCP 509.2 QCP 509.8 QCP 509.59 WPS 88-200-N12 ASME B31.1 WI Opn 200.6.31 & 200.6.32	Installation and welding meets codes, specs, and drawings. QCP 310.2 ASME 31.1 Section 136.4.2	**Q010** Inspection Report **Q012** System Inspection Report **W014** Weld Monitoring Checklist Weld Map	H V D		✓	✓	
	QC	I	**AECON QC** to > **Verify** that welding controls per QCP 509.59 & QCP 505.10 are complied with. > **Verify** internal cleanliness is being maintained through fabrication process > **Perform** weld monitoring in accordance with QCP 509.35 > **Verify** purge dams removed after completion of welding. > **Perform** visual inspection of all completed welds and document results on Q 012. > **Verify** completed weld map matches fabricated spool piece.								
105	Construction	I	**Weld Repair - IF Required:** If weld(s) fail inspection, remove defect(s)/ repair as per subsequently raised repair ITP	ISO Dwgs QCP 510.8 QCP 405.16 QCP 501.1 WI Opn 200.6.34	Repair ITP (Q040E)	Repair ITP **(Q0404E)** NCR (Closed)	H D		✓		
	QC	I	If repairs of welds are required, raise NCR and weld Repair ITP (if required).								

Inspection and Test Plan Number	A00004-M6-120421-W4100	Revision Number	0

Operation			Description	Controlling Document	Acceptance Criteria	History Docket	Inspection Point				Comments
No.	Department	Location Code					Aecon	Client	A.I./A.N.I.	OPG	
110	Construction	I	**Reinstall** valve internals and torque valve bonnet to body per match marks and the requirements of the Manufacturers Installation Operation and Maintenance Manual A00004-IOM-718648_3-10136	Manufacturers Installation Operation and Maintenance Manual A00004-IOM-718648_3-10136 Opn WI 200.6.35 200.6.36	Manufacturers Installation Operation and Maintenance Manual A00004-IOM-718648_3-10136	M-011 Torque Record	V		✓		
	QC	I	**Verify** the valve bonnet is reinstalled according to the match marks and **Torqued** to the requirements of the Manufacturers Installation Operation and Maintenance Manual A00004-IOM-718648_3-10136				D				
115	Construction	I	**Ensure** any required Valve or Equipment tagging is installed on completed piping	Dwg NK38-DRAW-38009-10005 WI Opn 200.6.38	Dwg NK38-DRAW-38009-10005	This ITP	V				
	QC	I	> **Verify** any required Valve or Equipment tagging is installed on completed piping.								

PROJECT:
JOB#:

SYSTEM INSPECTION LOG

AECON

WELD #	SYSTEM DESCRIPTION	SYSTEM #	LINE #	P&ID	LINE SPOOL A	LINE SPOOL B	LINE SPEC	WPS	WELD Type	WELD DIA / SIZE	WELD WT	WELD WID 1	WELD WID 2	VIS. INSP DATE	VIS. INSP SIGN OFF	PWHT #	UT # / DATE	NDE MT/PT # / DATE	REPAIR #2	PRESSURE TEST #	FINAL ACC	COMMENTS
FW-01	NK38-DRAW-38009-10005	6	L443	NK38-DRAW-38110-10025-0002	N/A	N/A	ANC	88-200-N12	BW	2	40	GL-1	—	28-11-16	JG							A00004-M6-120421-W41001
FW-05	NK38-DRAW-38009-10005	6	L442	NK38-DRAW-38110-10025-0002	N/A	N/A	ANC	88-200-N12	BW	2	40	DL-1	—	27-11-16	JG							A00004-M6-120421-W41001
FW-07	NK38-DRAW-38009-10005	6	L441	NK38-DRAW-38110-10025-0002	N/A	N/A	ANC	88-200-N12	BW	2	40	DL-1	—	27-11-16	JG							A00004-M6-120421-W41001
FW-14	NK38-DRAW-38009-10005	6	L440	NK38-DRAW-38110-10025-0002	N/A	N/A	ANC	88-200-N12	BW	2	40	JL-1	—	28-11-16	MC							A00004-M6-120421-W41001
FW-16	NK38-DRAW-38009-10005	6	L438	NK38-DRAW-38110-10025-0002	N/A	N/A	ANC	88-200-N12	BW	2	40	KR-1	—	27-11-16	JG							A00004-M6-120421-W41001
FW-18	NK38-DRAW-38009-10005	6	L439	NK38-DRAW-38110-10025-0002	N/A	N/A	ANC	88-200-N12	BW	2	40	DL-1	—	27-11-16	JG							A00004-M6-120421-W41001
FW-22	NK38-DRAW-38009-10005	6	L437	NK38-DRAW-38110-10025-0002	N/A	N/A	ANC	88-200-N12	BW	2	40	KR-1	—	27-11-16	JG							A00004-M6-120421-W41001
FW-26	NK38-DRAW-38009-10005	6	L436	NK38-DRAW-38110-10025-0002	N/A	N/A	ANC	88-200-N12	BW	2	40	KR-1	—	27-11-16	JG							A00004-M6-120421-W41001
FW-30	NK38-DRAW-38009-10005	6	L436	NK38-DRAW-38110-10025-0002	N/A	N/A	ANC	88-200-N12	BW	2	40	GS-1	—	19-Nov-16	BP							A00004-M6-120421-W41001
FW-32	NK38-DRAW-38009-10005	6	L443	NK38-DRAW-38110-10025-0002	N/A	N/A	ANC	88-200-N12	BW	2	40	GS-1	—	28-Nov-16	KM							A00004-M6-120421-W41001
FW-34	NK38-DRAW-38009-10005	6	L442	NK38-DRAW-38110-10025-0002	N/A	N/A	ANC	88-200-N12	BW	2	40	DL-1	—	27-11-16	JG							A00004-M6-120421-W41001
FW-36	NK38-DRAW-38009-10005	6	L441	NK38-DRAW-38110-10025-0002	N/A	N/A	ANC	88-200-N12	BW	2	40	DL-1	—	27-11-16	JG							A00004-M6-120421-W41001
FW-38	NK38-DRAW-38009-10005	6	L440	NK38-DRAW-38110-10025-0002	N/A	N/A	ANC	88-200-N12	BW	2	40	JT-1	—	18-Nov-16	MC							A00004-M6-120421-W41001
FW-42	NK38-DRAW-38009-10005	6	L439	NK38-DRAW-38110-10025-0002	N/A	N/A	ANC	88-200-N12	BW	2	40	JL-1	—	19-Nov-16	BP							A00004-M6-120421-W41001
FW-44	NK38-DRAW-38009-10005	6	L437	NK38-DRAW-38110-10025-0002	N/A	N/A	ANC	88-200-N12	BW	2	40	JL-1	—	19-Nov-16	BP							A00004-M6-120421-W41001
FW38A	"	6	440	"	Cutter Shrapnel At Butt Weld		MIC	"	BW	2	4	JL-1	—	28-Nov-16	KM							

Form Number: Q012 Rev 3

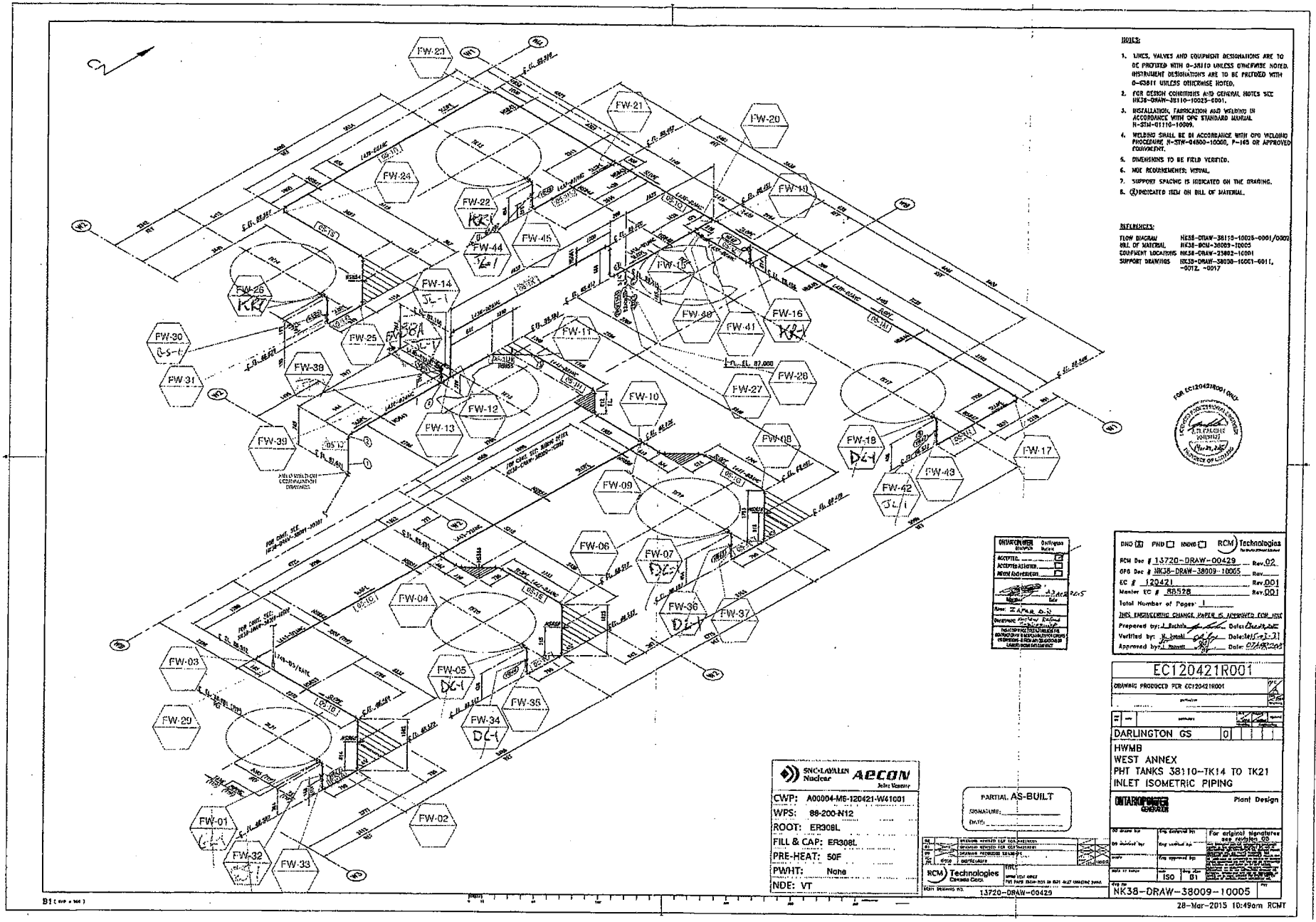
NOTES:
1. LINES, VALVES AND EQUIPMENT DESIGNATIONS ARE TO BE PREFIXED WITH 0-38110 UNLESS OTHERWISE NOTED. INSTRUMENT DESIGNATIONS ARE TO BE PREFIXED WITH 0-63811 UNLESS OTHERWISE NOTED.
2. FOR DESIGN CONDITIONS AND GENERAL NOTES SEE NK38-DRAW-38110-10025-0001.
3. INSTALLATION, FABRICATION AND WELDING IN ACCORDANCE WITH OPG STANDARD MANUAL N-STM-01110-10009.
4. WELDING SHALL BE IN ACCORDANCE WITH OPG WELDING PROCEDURE N-STW-04600-10000, P-105 OR APPROVED EQUIVALENT.
5. DIMENSIONS TO BE FIELD VERIFIED.
6. NDE REQUIREMENTS: VISUAL.
7. SUPPORT SPACING IS INDICATED ON THE DRAWING.
8. (X) INDICATED ITEM ON BILL OF MATERIAL.
REFERENCES:
FLOW DIAGRAM NK38-DRAW-38110-10025-0001/0002
BILL OF MATERIAL NK38-BOM-38009-10005
EQUIPMENT LOCATIONS NK38-DRAW-23402-10001
SUPPORT DRAWINGS NK38-DRAW-38000-10001-0011, -0012, -0017
FW-01
FW-02
FW-03
FW-04
FW-05
FW-06
FW-07
FW-08
FW-09
FW-10
FW-11
FW-12
FW-13
FW-14
FW-15
FW-16
FW-17
FW-18
FW-19
FW-20
FW-21
FW-22
FW-23
FW-24
FW-25
FW-26
FW-27
FW-28
FW-29
FW-30
FW-31
FW-32
FW-33
FW-34
FW-35
FW-36
FW-37
FW-38
FW-39
FW-40
FW-41
FW-42
FW-43
FW-44
FW-45
SNC·LAVALIN Nuclear
AECON Joint Venture
CWP: A00004-M6-120421-W41001
WPS: 88-200-N12
ROOT: ER308L
FILL & CAP: ER308L
PRE-HEAT: 50F
PWHT: None
NDE: VT
PARTIAL AS-BUILT
SIGNATURE:
DATE:
RCM Technologies Canada Corp.
13720-DRAW-00429
DNO ☒ PND ☐ INDWG ☐ RCM Technologies
RCM Doc # 13720-DRAW-00429 Rev. 02
OPG Doc # NK38-DRAW-38009-10005 Rev.
EC # 120421 Rev. 001
Master EC # 86528 Rev. 001
Total Number of Pages: 1
THIS ENGINEERING CHANGE PAPER IS APPROVED FOR USE
Prepared by:
Verified by:
Approved by:
Date:
EC120421R001
DRAWING PRODUCED PER EC120421R001
DARLINGTON GS
HWMB
WEST ANNEX
PHT TANKS 38110-TK14 TO TK21
INLET ISOMETRIC PIPING
Plant Design
For original signatures see revision 00
ISO
01
NK38-DRAW-38009-10005
28-Mar-2015 10:49am RCMT

ONTARIOPOWER GENERATION

Internal Use Only

Unit: 0	USI: 38110	Device: V940 & V941
Date: 20-Jul-2016		Work Order: 2910081

Darlington Nuclear

WORKPLAN

NK38-WPL-38110-0457864-REV 0

TIE-IN TO PHT D2O SUPPLY SYSTEM – 0-38110-V940 & V941

Unit(s): 0

Usage Classification: REFERENCE

Radiological Classification: MEDIUM HAZARD

Design EC: 120402

Master EC: 119824

Project: 16-31555

MASTER COPY 2016-Nov-30

MASTER COPY

This page has been left blank intentionally.

MASTER COPY

Work Order: 2910081		
Work Plan Number: NK38-WPL-38110-0457864	Rev: 0	Page 3 of 29
Usage Classification: REFERENCE	Unit: 0	
Title: TIE-IN TO PHT D2O SUPPLY SYSTEM – 0-38110-V940 & V941		

APPROVAL SHEET

Prepared by: _____ Date: 8-AUG-2016
Jeff Ezard
Technical Officer
OPG Refurbishment Projects

Verified by: _____ Date: Aug 11/16
Paul Renaud
Senior Technical Officer
OPG Refurbishment Projects

Reviewed by: _____ Date: 26 Aug 2016
Andrew Mazzei
HWMB SRE
TRF Technical

_____ Date: 18 Aug 2016
for Mike Battye
Construction Supervisor
SLN-Aecon Joint Venture

_____ Date: 18 AUG 2016
Eric Duncan
for Contract Administrator
Contractor Management Office

_____ Date: 15 AUG 2016
Karly Gorman
Health & Safety Advisor
Corporate Health & Safety

_____ Date: 26 Aug 2016
Ian Edwards
Senior Health Physicist
Refurbishment Radiation Safety

Work Order: 2910081		
Work Plan Number: NK38-WPL-38110-0457864	Rev: 0	Page 4 of 29
Usage Classification: REFERENCE	Unit: 0	
Title: TIE-IN TO PHT D2O SUPPLY SYSTEM – 0-38110-V940 & V941		

David Lopez
Reactor Safety Support
Nuclear Refurbishment

Date: Aug 31, 2016

Glen Barton
Field Shift Operating Supervisor
TRF Operations

Date: Aug 26th/2016

Approved by:

Constantin Banica
Section Manager
OPG Refurbishment Projects

Date: 31 Aug 2016

Shift Manager Approval:

Date: 1 Sept 2016

Authorized by:

Steve Gregoris
Director of Operations & Maintenance
DNGS Ops & Maintenance

Date: Sep 2/16

TABLE OF CONTENTS

1.0 PURPOSE 7

1.1 Objective 7
1.2 Applicability 7

2.0 PRECAUTIONS, CONSIDERATIONS, LIMITATIONS 8

2.1 Preliminary Considerations 8
2.2 Reactor Safety 8
2.3 Radiological Safety 10
2.4 Conventional Safety 10
2.5 Environmental Safety 10
2.6 Chemical Considerations 10
2.7 Backout Provisions 11

3.0 PREREQUISITES 12

3.1 Measuring and Test Equipment, Special Tools and Materials 12
3.2 Performance References 12
3.3 Developmental References 14
3.4 Special Instructions 14
3.5 Installation Prerequisites 15
3.6 Pre-Fabricate Valve 0-38110-V940 & V941 Spool Assemblies 17

4.0 DETAILED WORKPLAN INSTRUCTIONS 18

4.1 Prepare for HWMB HT D2O S&I Unavailability 18
4.2 Install Valve 0-38110-V940 Spool Assembly 19
4.3 Install Valve 0-38110-V941 Spool Assembly 21
4.4 Post-Installation Testing 23
4.5 Remove Scaffolding and Rubber Area(s) 25

5.0 ACCEPTANCE 25

5.1 Acceptance Criteria 25
5.2 Acceptance Verification 25

6.0 RETURN TO NORMAL 25

7.0 POST REQUISITES 25

8.0 REQUIREMENTS 26

9.0 TERMS AND DEFINITIONS 26

10.0 SUMMARY OF CHANGES 27

11.0 APPENDICES 27

Work Order: 2910081		
Work Plan Number: NK38-WPL-38110-0457864	Rev: 0	Page 6 of 29
Usage Classification: REFERENCE	Unit: 0	
Title: TIE-IN TO PHT D2O SUPPLY SYSTEM – 0-38110-V940 & V941		

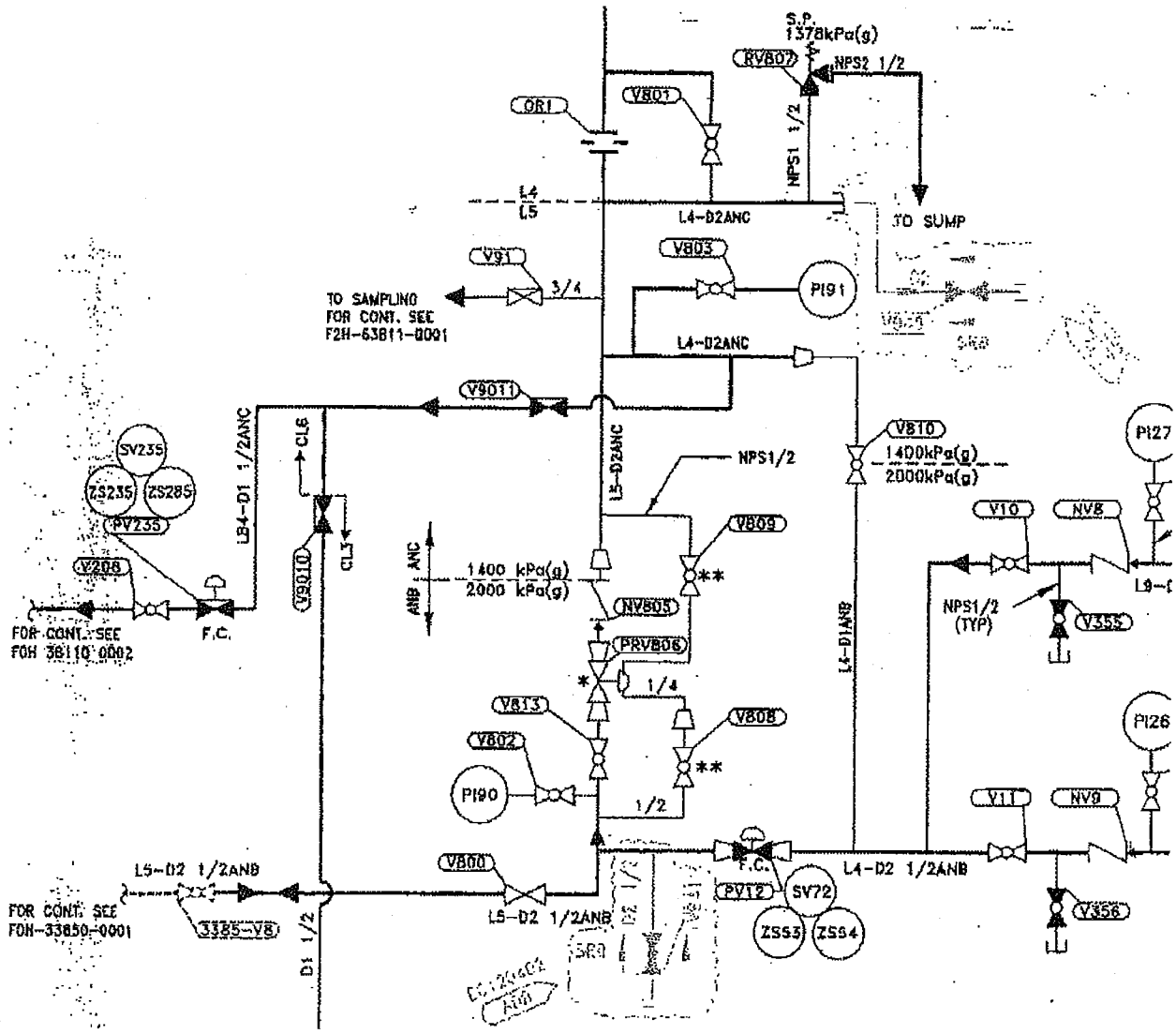

1.0 PURPOSE

1.1 Objective

This workplan describes the steps required to install two (2) tie-in connection points on the Heavy Water Management Building (HWMB) Heat Transport (HT) D2O Supply and Inventory (S&I) System; these connection points will allow for future tie-in of the HWMB HT D2O S&I System to the new HWMB West Annex.

1.2 Applicability

This Workplan applies to the following equipment:

Unit	System (USI/SCI)	Equipment/Component	Elevation and Location
0	38110	V940	HWMB, EL. 87.000, RM D-001
0	38110	V941	HWMB, EL. 87.000, RM D-001

Verify the proper field equipment nomenclature prior to field device manipulation (UNIT-SCI-DEVICE)

MASTER COPY

2.0 PRECAUTIONS, CONSIDERATIONS, LIMITATIONS

2.1 Preliminary Considerations

2.1.1 In accordance with Section B 1.5.7 of NK38-OPP-03600, *Operating Policies and Principles*, Design Authority (DA) approval has been obtained as indicated by the approved Engineering Change (EC) Package(s) listed in Section 3.2.1 of this workplan. Director of Operations and Maintenance (DOM) approval has been obtained as indicated by the applicable signature on this workplan.

2.1.2 The Master copy of this workplan shall be retained in the HWMB Work Control Area (WCA) D-118 and progress shall be updated daily.

2.1.3 A copy of this workplan shall be available at the work location and should be referred to periodically or as often as necessary to confirm that the correct workplan steps are performed.

2.1.4 This workplan will be executed by a qualified ES-MSA vendor. Unless otherwise noted, the vendor will perform work under their Quality Assurance (QA) program. OPG will perform Quality Surveillance (QS) only.

2.1.5 Inspection and Test Plans (ITP) to be prepared per the vendor's QA program. Post-installation testing of the equipment, in accordance with Section B 1.5.4 of NK38-OPP-03600, includes visual inspection ~~Non-Destructive Examination (NDE)~~ of all welds, a flow rate test, and an Operational Pressure Test (OPT).

2.1.6 Vendor to prepare Safe Work Plans (SWP) and conduct Pre-Job Briefs (PJB) for their work.

2.2 Reactor Safety

2.2.1 This workplan can be safely executed with all Units operating; however, permitry established in section 4.1 will prevent the transfer of HT D2O between the HWMB and the Units; however, the transfer of HT D2O between Units will still be available via the PHT D2O Transfer Header. Permitry will be in place for 24 to 48 hours to allow for installation and testing of the two (2) tie-in connection points on the HWMB HT D2O S&I System.

2.2.2 A maximum recall time of 72 hours is applicable to all work performed on the Heat Transport System (HTS) under normal operating conditions (Reference: NK38-CORR-38000-0524172). If a recall situation arises, work must be completed expeditiously to return the system to service.

Work Order: 2910081		
Work Plan Number: NK38-WPL-38110-0457864	Rev: 0	Page 9 of 29
Usage Classification: REFERENCE	Unit: 0	
Title: TIE-IN TO PHT D2O SUPPLY SYSTEM – 0-38110-V940 & V941		

2.2.3 Other reactor safety considerations:

- HTS D2O Storage Tanks must be filled to a minimum level of 8.5 m prior to the making the HWMB HT D2O S&I System unavailable to ensure adequate inventory in accordance with Section B 3.2 and Appendix B 3.1 of NK38-OPP-03600.
- This modification cannot be performed if any unit is in Low Level Drainage State (LLDS).
- There must be no significant or unusual PHT leakage issues on any Unit which could result in a recall of the HWMB HT D2O S&I System. Additionally, this modification cannot be performed simultaneously with planned maintenance that removes a PHT D2O Leakage Collection Pump from service.
- There must be no impairments on the ECI Recovery System which prevent it from performing its credited safety function in the event of a postulated accident.
- In the event of a postulated accident, the PHT D2O Transfer Header, if unavailable, must be returned to service within 72 hours to allow the affected Unit(s) to go into LLDS; while this is the limiting requirement within the license, all efforts must be made to further reduce the duration of HT D2O transfer unavailability.
- ~~If this work is performed in parallel with the PHT D2O Transfer Header isolation bellows installation work (Reference: NK38-WPL-33850-0565614), then HWMB HT D2O S&I System line 0-38110-L4 cannot be cut open until the isolation bellows have been installed and containment boundary has been restored.~~

The following mark-up was made on 24-Nov-2016:

- Removed restriction above preventing line 0-38110-L4 from being cut open if line 2-33850-L4 had already been cut open to install the isolation bellows per NK38-WPL-33850-0565614. This restriction was in place to ensure work was performed in series to maintain containment boundary; however, containment boundary will be maintained using an RSA TCR (DA0030356) on isolation valve 0-33850-V8 allowing this work to be performed in parallel.

Prepared by: Jeff Ezard — Date: 24-Nov-2016

Reviewed by: David Lopez — Date: 25-Nov-2016

Verified by: Constantin Banica — Date: 24-NOV-2016

Approved by: MARCUS FOR J. MCDONALD — Date: 25 NOV - 2016

2.3 Radiological Safety

2.3.1 This work will be performed in Zone 3 within the HWMB.

2.3.2 Refer to task-specific Radiological Exposure Permit (REP) for radiological requirements and backout conditions associated with this workplan.

~~2.3.3 Radiography will be the method used to perform NDE of welds. A radiography shot plan, reviewed by OPG Health Physics, must be strictly adhered to during radiography activities.~~

2.4 Conventional Safety

2.4.1 All work will be planned as per OPG-PROC-0129, *Safe Work Planning*. There are no unique conventional safety hazards associated with the execution of this workplan.

2.4.2 All precautions associated with N-STW-04800-10000, *Welding and Grinding Health and Safety*, and N-PROC-RA-0057, *Control of Ignition Sources and Hot Work Activities*, shall be taken for protection against hazards associated with welding activities. Ignition Source Permits will be required for all hot work activities.

2.5 Environmental Safety

2.5.1 Waste disposal will be controlled and executed per D-INS-79000-10001, *Waste Disposal Guidelines for Oil and Chemical Wastes at Darlington*, D-INS-79000-10002, *Waste Disposal Guidelines for Solid Waste and Recycling at Darlington*, and N-FORM-11155, *Waste Disposal Plan*.

2.5.2 Spill prevention, assessment, and response to spills will be controlled and executed per D-INS-07290-10000, *Darlington Spill Prevention and Contingency Plan*. All spills shall be immediately reported to the CMO.

2.6 Chemical Considerations

N/A

2.7 Backout Provisions

When unexpected (i.e., outside the bounds of this workplan) or unsafe working conditions are encountered, STOP all work, leave the work place in a safe state (if safe and practical to do so), and notify supervisor. In the event of a radiological alarm, direction shall be provided by the Radiation Protection Coordinator (RPC).

2.7.1 Special Backout Provisions – Restoration of HWMB HT D2O S&I System

A 12 hour recall time will be established for this work; in order to successfully return the HWMB HT D2O S&I System to service within this time in the event of a recall, the workplan will be executed with the following provisions:

- Tie-in spool assemblies will be pre-fabricated with final welds performed in situ.
- Resources will be assigned on the basis of back-to-back 12 hour shifts to ensure work is continuous.
- Vendor QA resources will be available at all times to ensure that verification and witness points are performed immediately.

If the Shift Manager initiates a recall on the HWMB HT D2O S&I System prior to removal of work protection, then the following must occur:

(1) IF line 0-38110-L4-D2 and line 0-38110-L4-D2½ have NOT been cut per step 4.2.5 and step 4.3.5, respectively, THEN stop work, remove work protection, and transfer D2O via normal procedures.

(2) IF line 0-38110-L4-D2 or line 0-38110-L4-D2½ has been cut per step 4.2.5 or step 4.3.5, respectively, THEN continue installation of tie-in connection point(s) and notify Shift Manager of remaining time until work protection is removed.

MASTER COPY

3.0 PREREQUISITES

3.1 Measuring and Test Equipment, Special Tools and Materials

3.1.1 Tools and Equipment

All measuring and test equipment required to execute the activities in this workplan shall be supplied by the vendor and calibrated per their QA program.

3.1.2 Materials

Document Number	Title
NK38-BOM-38110-10002	DBOM FOR NK30-D0H-38009-EC120402 TIE INTO PHT D2O SUPPLY SYSTEM FOR HWMB

3.2 Performance References

3.2.1 Engineering Change (EC) Packages

EC Number	Title
Master EC 119824	0-38000-MASTER-PMOD FOR LPSW DISCHARGE LINE (SCI 72100), TIE-INS FOR MODERATOR & HTS D2O SUPPLY (SCI 38110) & RELOCATIONS OF TRF BULK GAS SYSTEMS (SCI 75510, 75540, 75550, 67550)
Design EC 120402	0-38110- DESIGN-MECH – TIE-IN TO/FROM PRIMARY HEAT TRANSPORT D2O SUPPLY/TRANSFER SYSTEM

3.2.2 Work Orders

Work Order Number	Title
2910081	NR CP0100-1DEC:120402 TIEIN TO/FROM HT D2O SUPP/TRANSFER SYS

3.2.3 Drawings

Document Number	Title
NK38-D0H-38009-0008	D2O MGMT BLDG FL EL 87.000 COL ROW DA1-DC LINE D3- D4 D2O SUPPLY CLEAN UP AND TRANSFER SYSTEM PIPING
NK38-F0H-38110-0001	D2O MANAGEMENT BLDG. D2O SUPPLY SYSTEM FLOW DIAGRAM

NOTE: Refer to EC change papers for a comprehensive list of drawings.

3.2.4 Flowsheets

Document Number	Title
NK38-FXX-38110-0501	D2O MANAGEMENT BUILDING D2O SUPPLY SYSTEM

3.2.5 Procedures

Document Number	Title
D-INS-07290-10000	Darlington Spill Prevention and Contingency Plan
D-INS-09100-10012	Control of Position Assured Components
D-INS-79000-10001	Waste Disposal Guidelines for Oil And Chemical Wastes at Darlington
D-INS-79000-10002	Waste Disposal Guidelines for Solid Waste and Recycling at Darlington
N-INS-09070-10001	Space Allocation for Transient Material and Extended Storage of Material and Equipment
N-INS-09100-10005	Correct Component Verification
N-PROC-MA-0012	Work Protection
N-PROC-MA-0018	Foreign Material Exclusion
~~N-PROC-MA-0055~~	~~Conduct of Radiography~~
N-PROC-OP-0027	Temporary Change Records
N-PROC-OP-0034	Equipment Labelling
N-PROC-RA-0015	Contamination Control While Performing Work
N-PROC-RA-0017	Segregation and Handling of Radioactive Waste
N-PROC-RA-0027	Radioactive Work Planning, Execution, and Close Out
N-PROC-RA-0057	Control of Ignition Sources and Hot Work Activities
OPG-PROC-0129	Safe Work Planning
OPG-PROC-0130	Management of Hazardous Physical Agents
OPG-PROC-0133	Temporary Safety Warning Signs and Warning Barriers
OPG-PROC-0136	Falling Object Prevention
OPG-PROC-0137	Fall Protection

3.2.6 Forms

Document Number	Title
N-FORM-10024	Pre-Job Briefing and Post-Job Debriefing
N-FORM-10036	Foreign Material Exclusion Plan
N-FORM-10241	Ignition Source Permit
N-FORM-10540	Temporary Change Record
N-FORM-11155	Waste Disposal Plan
N-FORM-11189	Terminal Point Change Request
N-FORM-11307	Request for Addition or Deletion of EIDs as Devices Locked for Work Protection
OPG-FORM-0084	Safe Work Plan

3.2.7 Manuals

Document Number	Title
N-MAN-08965-10001	Conventional Safety Technical Basis
N-STM-01110-10001	Nuclear Construction Requirements Manual

3.2.8 Applicable Standards, Codes, and Policies

Document Number	Title
N-STD-AS-0002	Procedure Use and Adherence
N-STD-MA-0008	Station Material Condition and Housekeeping
N-STW-04800-10000	Welding and Grinding Health and Safety
NK38-OPP-03600	Operating Policies and Principles

3.3 Developmental References

Document Number	Title
NK38-CORR-38000-0524172	Reactor Safety Assessment – Impact of Recall Time During Heat Transport System Installation of Alternate OPP Devices Under MEC 117318 for D2O Islanding at DNGS
NK38-WPL-33850-0565614	PHT D2O Transfer Header Isolation & Containment Bellows Installation at EP-00795

3.4 Special Instructions

N/A

3.5 Installation Prerequisites

NOTE

- Sections 3.5 and 3.6 can be done in parallel.
- Steps in Section 3.5 can be performed in any logical order.
- Steps in Section 3.5.1 and 3.5.2 are to be done daily or as often as necessary to facilitate execution of work.

3.5.1 General – Aecon

- **AEC**: PREPARE SWP(s) ..... ☑ 2016-Nov-8
- **AEC**: PREPARE CWP(s) ..... ☑ 2016-Nov-8
- **AEC**: PREPARE ITP(s) ..... ☑ 2016-Nov-8
- **AEC**: PREPARE Foreign Material Exclusion (FME) Plan ..... ☑ 2016-Nov-8
- **AEC**: PREPARE Ignition Source Permit(s) ..... ☑ 2016-Nov-8
- **AEC**: REQUEST equipment tag for valves 0-38110-V940 and V941 from Plant Status Group ..... ☑ 2016-Nov-8
- AEC: SUBMIT N-FORM-11189 to identify valves 0-38110-V940 and 0-38110-V941 as Terminal Points (TP) with OTFD having operational control and AEC having non-operational control ..... ☑ 2016-Nov-8
- AEC: SUBMIT N-FORM-11307 to identify valves 0-38110-V940 and 0-38110-V941 as devices locked for work protection ..... ☑ 2016-Nov-8
- AEC: INITATE Reactor Safety Alignment (RSA) TCR per N-PROC-OP-0027 to ensure valves 0-38110-V940 and 0-38110-V941 remain closed and locked after installation ..... ☑ 2016-Nov-8
  - TCR # DA0032660
- **AEC**: SUBMIT flowsheet mark-up for NK38-FXX-38110-0501 incorporating changes from EC 120402 ..... ☑ 2016-Nov-8
- **AEC**: SUBMIT PC1-N(s) for isolation of lines 0-38110-L4-D2 and 0-38110-L4-D2½ ..... ☑ 2016-Nov-8
- **AEC**: OBTAIN Work Authorization (WA) ..... ☑ 2016-Nov-8
- **AEC**: ESTABLISH safe work area ..... ☑ 2016-Nov-8

Work Order: 2910081		
Work Plan Number: NK38-WPL-38110-0457864	Rev: 0	Page 16 of 29
Usage Classification: REFERENCE	Unit: 0	
Title: TIE-IN TO PHT D2O SUPPLY SYSTEM – 0-38110-V940 & V941		

- **AEC**: ESTABLISH & MAINTAIN SATM area(s), as required ..... ☑ 2016-Nov-8
- **AEC**: ERECT scaffolding, as required, to facilitate access to work areas ..... ☑ 2016 Nov 24
- **AEC**: ERECT vented tenting connected to contaminated exhaust system per N-PROC-RA-0015 ..... ☑ 2016 Nov 24
- **AEC**: ESTIMATE amount of catch containment required based on volume of D2O to be drained ..... ☑ 2016 Nov 24
- **AEC**: SETUP and/or STAGE sufficient catch containment in rubber area(s) based on volume of D2O estimated in previous step ..... ☑ 2016 Nov 24
- **AEC**: STAGE pipe banding material to mitigate leaks in the event of passing isolation ..... ☑ 2016 Nov 24
- **AEC**: NOTIFY RP two (2) days in advance of requiring RPC support ..... ☑ 2016 Nov 24

3.5.2 General – OPG

- **FE/OPGQS**: REVIEW vendor ITP(s) ..... ☑ 2016-Nov-8
- **FE/OPGQS**: ENSURE appropriate Hold (H), Witness (W), and Verification (V) points are incorporated into vendor ITP(s) ..... ☑ 2016-Nov-16
- **OTFD**: PREPARE work protection per submitted PC1-N(s) ..... ☐
- **PLANT STATUS GROUP**: FABRICATE equipment tags for valves 0-38110-V940 and 0-38110-V941 ..... ☑ 2016-Nov-8
- **PLANT STATUS GROUP**: PREPARE Terminal Point (TP) tags for valves 0-38110-V940 and 0-38110-V941 ..... ☑
- **SRE**: INITIATE TCR Flowsheet Action Request (FAR) to mark-up flowsheet NK38-FXX-38110-0501 to incorporate changes from EC 120402 ..... ☑ 2016-Nov-8
  - TCR FAR # D90024571
- **MS**: SETUP rubber area(s) ..... ☑ 2016-Nov-16
- **TRD**: SETUP remote monitoring system (ICAM) at tie-in locations ..... ☑ DP 2016-Nov-16
- **TRD**: SETUP Portable Tritium Monitor inside rubber area(s) with alarm set at 80% of upper limit of REP for tritium ..... ☑ DP 2016-Nov-16

Work Order: 2910081		
Work Plan Number: NK38-WPL-38110-0457864	Rev: 0	Page 17 of 29
Usage Classification: REFERENCE	Unit: 0	
Title: TIE-IN TO PHT D2O SUPPLY SYSTEM – 0-38110-V940 & V941		

- **TRD**: SETUP Portable Tritium Monitor outside rubber area(s) with alarm set at 0.5 MPCa ..... ☑ 26-Nov-2016
- **TRD**: PLACE rubber area(s) in service ..... ☑ 26-Nov-16

3.6 Pre-Fabricate Valve 0-38110-V940 & V941 Spool Assemblies

3.6.1 **AEC**: PERFORM FME inspections of valves and piping material per FME plan ..... ☑ 2016-Nov-8

3.6.2 **AEC**: FABRICATE tie-in spool assemblies per ITP ..... ☑ 2016-Nov-8

3.6.3 **AEC**: SECURE equipment tags to valves 0-38110-V940 and 0-38110-V941 per N-PROC-OP-0034 ..... ☑ 2016-Nov-25

3.6.4 AEC: VERIFY equipment tags have been secured to correct components per N-PROC-OP-0034:

- 0-38110-V940 ..... ☑ 2016-Nov-25

  AEC Name: Jean-Paul LePage Initials: JL

- 0-38110-V941 ..... ☑ 2016-Nov-25

  AEC Name: Jean-Paul LePage Initials: JL

3.6.5 **AEC**: PERFORM hydrostatic test of tie-in spool assemblies per ITP ..... ☑ 2016-Nov-8

3.6.6 **AEC**: IF hydrostatic test fails THEN:

- **AEC**: REPAIR tie-in spool assembly ..... N/A ☑ or ☐ 2016-Nov-8
- **AEC**: REPEAT hydrostatic test per step 3.6.5 ..... N/A ☑ or ☐ 2016-Nov-8

3.6.7 **AEC**: FULLY OPEN and CLOSE valves 0-38110-V940 and 0-38110-V941 to confirm freedom of movement ..... ☑ 2016-Nov-8

3.6.8 **AEC**: INSTALL FME covers on tie-in spool assemblies per FME plan ..... ☑ 2016-Nov-8

Work Order: 2910081		
Work Plan Number: NK38-WPL-38110-0457864	Rev: 0	Page 18 of 29
Usage Classification: REFERENCE	Unit: 0	
Title: TIE-IN TO PHT D2O SUPPLY SYSTEM – 0-38110-V940 & V941		

4.0 DETAILED WORKPLAN INSTRUCTIONS

4.1 Prepare for HWMB HT D2O S&I Unavailability

NOTE

- Step 4.1.1 should be performed as soon as practical (i.e., within 24 hours) prior to making the HWMB HT D2O S&I System unavailable in steps 4.1.4 and 4.1.5; this will ensure that all Units have the maximum available inventory of HT D2O.

STEP 4.1.1 Completed >24hrs prior to System Unavailable due to U2 Refurb Bellows work Plan

4.1.1 **OTFD**: TOP-UP Unit HT Storage Tanks per D2O Management Sheet to a minimum level of 8.5 m ..... N/A ☐ or ☑

Unit	HT Storage Tank	Time/Date
Unit 1	N/A ☒ or ☐	10:45 / 25 NOV 2016
Unit 2	N/A ☒ or ☒	: /
Unit 3	N/A ☒ or ☐	/
Unit 4	N/A ☒ or ☐	/

4.1.2 **OTFD**: CONFIRM with Unit OPS that conditions permit taking the HWMB HT D2O S&I System out of service for up to 48 hours ..... ☑

4.1.3 **OTFD**: NOTIFY Shift Manager that HWMB HT D2O S&I system will be unavailable for up to 48 hours ..... ☑

COMPLETED TO THIS POINT 5 NOV 2016 18:00

4.1.4 **OTFD**: PREPARE HWMB HT D2O S&I system for application of work protection ..... ☑

4.1.5 **OTFD**: ESTABLISH work protection ..... ☑

4.1.6 **AEC**: SIGN-ON to work protection ..... ☑

4.2 Install Valve 0-38110-V940 Spool Assembly

NOTE

- Sections 4.2 and 4.3 may be performed in parallel; however, only one cut may be made in line 0-38110-L4 until integrity of isolation is confirmed.
- Work must progress on a continuous basis to ensure the HWMB HT D2O S&I System is returned to service as soon as possible.
- The Shift Manager may recall the HWMB HT D2O S&I System at anytime during the outage. Refer to special backout conditions in section 2.7.1 if a recall situation arises.

4.2.1 **TRD**: PERFORM regular contamination surveys in rubber area(s) until tie-in work is complete ..... ☑

4.2.2 **TRD**: IF contamination exceeding rubber area(s) limit is found THEN:

- **MS**: DECONTAMINATE affected area ..... N/A ☐ or ☑
- **TRD**: REPEAT survey per step 4.2.1 ..... N/A ☐ or ☑

ALARA

- This system contains Heat Transport D2O; therefore, cutting activities will generate loose contamination, airborne contamination, and/or tritium oxide. Catch containment shall be used to collect residual D2O and restrict the spread of contamination.
- In the event of passing isolation, pipe banding may be used to limit D2O leakage until isolation can be established.
- Spilled D2O must be cleaned up immediately and collected in an approved container; OTFD shall be contacted for disposal of collected D2O.
- Due to piping configuration in the HWMB, Argon 41 gamma fields greater than 2 mrem/h are expected in D-001 during (and for 2-4 hours following) on-line Moderator transfers.

DA276 5279 i/e Step 30

4.2.3 **AEC/OTFD**: CONFIRM with Unit OPS that containment boundary is not affected by the installation of isolation bellows on the PHT D2O Transfer Header ..... N/A ☐ or ☑
*THIS STEP CAN BE CHECKED 'N/A' AT DISCRETION OF OTFD PER MARK-UP ON PAGE 9.

4.2.4 **AEC**: ENSURE catch containment in place where cut will occur ..... ☑

4.2.5 **AEC**: CUT underside of line 0-38110-L4-D2 at tie-in location per NK38-D0H-38009-0008 ..... ☑

4.2.6 **AEC**: IF the line is not drained THEN:

- **AEC**: DRAIN residual D2O into catch containment .....N/A ☐ or ☐
- **AEC**: NOTIFY OTFD for disposal of collected D2O.....N/A ☐ or ☐

4.2.7 **AEC/OTFD**: CONFIRM integrity of isolation..... ☐

4.2.8 **AEC**: COMPLETE cut of line 0-38110-L4-D2 at tie-in location per NK38-D0H-38009-0008..... ☐

4.2.9 **AEC**: PERFORM FME inspections per FME plan..... ☐

4.2.10 **AEC**: INSTALL pre-fabricated tie-in spool assembly per NK38-D0H-38009-0008 .... ☐

ALARA

- ~~A radiography exclusion zone shall be established with a boundary dose not exceeding 2.5 mrem/h; access points to this exclusion zone shall be barricaded with rope, signage, and flashing lights per N-PROC-MA-0055. Public Address (PA) announcements shall be made prior to and during radiography activities.~~

4.2.11 **AEC**: PERFORM visual ~~NDE~~ inspection of all welds per ITP..... ☐

4.2.12 **AEC**: FULLY OPEN and CLOSE valve 0-38110-V940 to confirm freedom of movement..... ☐

4.2.13 **AEC**: ENSURE valve 0-38110-V940 is closed + Locked..... ☐

4.3 Install Valve 0-38110-V941 Spool Assembly

NOTE

- Sections 4.2 and 4.3 may be performed in parallel; however, only one cut may be made in line 0-38110-L4 until integrity of isolation is confirmed.
- Work must progress on a continuous basis to ensure the HWMB HT D2O S&I System is returned to service as soon as possible.
- The Shift Manager may recall the HWMB HT D2O S&I System at anytime during the outage. Refer to special backout conditions in section 2.7.1 if a recall situation arises.

4.3.1 **TRD**: PERFORM regular contamination surveys in rubber area(s) until tie-in work is complete ..... ☐

4.3.2 **TRD**: IF contamination exceeding rubber area(s) limit is found THEN:

- **MS**: DECONTAMINATE affected area ..... N/A ☐ or ☐
- **TRD**: REPEAT survey per step 4.3.1 ..... N/A ☐ or ☐

ALARA

- This system contains Heat Transport D2O; therefore, cutting activities will generate loose contamination, airborne contamination, and/or tritium oxide. Catch containment shall be used to collect residual D2O and restrict the spread of contamination.
- In the event of passing isolation, pipe banding may be used to limit D2O leakage until isolation can be established.
- Spilled D2O must be cleaned up immediately and collected in an approved container; OTFD shall be contacted for disposal of collected D2O.
- Due to piping configuration in the HWMB, Argon 41 gamma fields greater than 2 mrem/h are expected in D-001 during (and for 2-4 hours following) on-line Moderator transfers.

4.3.3 **AEC/OTFD**: CONFIRM with Unit OPS that containment boundary is not affected by the installation of isolation bellows on the PHT D2O Transfer Header ..... N/A ☐ or ☐

4.3.4 **AEC**: ENSURE catch containment in place where cut will occur ..... ☐

4.3.5 **AEC**: CUT the underside of line 0-38110-L4-D2½ at tie-in location per NK38-D0H-38009-0008 ..... ☐

Work Order: 2910081		
Work Plan Number: NK38-WPL-38110-0457864	Rev: 0	Page 23 of 29
Usage Classification: REFERENCE	Unit: 0	
Title: TIE-IN TO PHT D2O SUPPLY SYSTEM – 0-38110-V940 & V941		

4.4 Post-Installation Testing

4.4.1 **AEC**: SURRENDER work protection ..... ☑

4.4.2 **OTFD**: CONFIRM valves 0-38810-V940 and 0-38110-V941 closed per steps 4.2.13 and 4.3.13 ..... ☑

> **NOTE**
>
> - Steps 4.4.3 through 4.4.5 can be performed in parallel or any logical order.

4.4.3 **OTFD**: INSTALL, VERIFY, and ACCEPT TCR FAR # 24571 ..... ☑

4.4.4 OTFD: APPLY RSA TCR # DA32660 to ensure valves 0-38110-V940 and 0-38110-V941 closed and locked ..... ☑

4.4.5 **OTFD**: ~~IDENTIFY~~ TAG valves 0-38110-V940 and 0-38110-V941 as Terminal Points (TP) per N-PROC-MA-0012 ..... ☑

4.4.6 **OTFD**: REMOVE work protection ..... ☑

4.4.7 **AEC**: ENSURE catch containment in place where leaks may occur during OPT ..... ☑ 10/128

> **NOTE**
>
> - ~~If~~ This work is being performed in parallel with the PHT D2O Transfer Header bellows work; ~~then~~ therefore, a flow rate test will be performed per Section 4.5 of NK38-WPL-33850-0565614 and WO task 4847430-54. ~~and OPS may opt not to perform an additional flow rate test per this workplan.~~
> - ~~If a flow rate test is performed per this workplan then it will be performed simultaneously with an Operational Pressure Test (OPT); therefore the steps associated with each test can be performed in parallel.~~

~~4.4.8 MC: SET UP ultrasonic flow rate meter on HWMB HT D2O S&I System line 0-38110-L4 downstream of tie-in locations ..... N/A ☐ or ☐~~

4.4.9 **OTFD**: NOTIFY AEC prior to performing D2O ~~transfer~~ re-circulation in subsequent step ..... ☑

4.4.10 ~~**OPS/OTFD**: TRANSFER D2O from the HWMB to a Unit HT Storage Tank~~ RE-CIRCULATE D2O through the HWMB HT D2O S&I System per D2O Management Sheet in support of OPT on valve 0-38110-V940 spool assembly ..... ☑

Work Order: 2910081		
Work Plan Number: NK38-WPL-38110-0457864	Rev: 0	Page 22 of 29
Usage Classification: REFERENCE	Unit: 0	
Title: TIE-IN TO PHT D2O SUPPLY SYSTEM – 0-38110-V940 & V941		

4.3.6 **AEC**: IF the line is not drained THEN:

- **AEC**: DRAIN residual D2O into catch containment .....N/A ☑ or ☐
- **AEC**: NOTIFY OTFD for disposal of collected D2O.....N/A ☐ or ☑

4.3.7 **AEC/OTFD**: CONFIRM integrity of isolation..... ☑

4.3.8 **AEC**: COMPLETE cut of line 0-38110-L4-D2½ at tie-in location per NK38-D0H-38009-0008..... ☑

4.3.9 **AEC**: PERFORM FME inspections per FME plan..... ☑

4.3.10 **AEC**: INSTALL pre-fabricated tie-in spool assembly per NK38-D0H-38009-0008 .... ☑

ALARA

~~A radiography exclusion zone shall be established with a boundary dose not exceeding 2.5 mrem/h; access points to this exclusion zone shall be barricaded with rope, signage, and flashing lights per N-PROC-MA-0055. Public Address (PA) announcements shall be made prior to and during radiography activities.~~

4.3.11 **AEC**: PERFORM visual ~~NDE~~ inspection of all welds per ITP..... ☑

4.3.12 **AEC**: FULLY OPEN and CLOSE valve 0-38110-V941 to confirm freedom of movement..... ☑

4.3.13 **AEC**: ENSURE valve 0-38110-V941 is closed ..... ☑

Work Order: 2910081		
Work Plan Number: NK38-WPL-38110-0457864	Rev: 0	Page 24 of 29
Usage Classification: REFERENCE	Unit: 0	
Title: TIE-IN TO PHT D2O SUPPLY SYSTEM – 0-38110-V940 & V941		

~~4.4.11 **MC**: RECORD flow rate during D2O transfer ..... N/A ☐ or ☐~~

~~Flow Rate (L/s): _____ Date: _____ Initials: _____~~

~~4.4.12 **OPS/OTFD**: CONFIRM flow rate recorded in previous step is not less than 8 L/s or confirm that flow rate test performed per NK38-WPL-33850-0565614 is acceptable. ☐~~

~~Initials: _____~~

4.4.13 **AEC**: WITNESS OPT on valve 0-38110-V940 spool assembly per ITP ..... ☑

4.4.14 **AEC**: IF leak(s) observed during OPT on valve 0-38110-V940 spool assembly THEN:

- **AEC**: NOTIFY OTFD immediately ..... N/A ☑ or ☐
- **OTFD**: TERMINATE D2O ~~transfer~~ re-circulation ..... N/A ☑ or ☐
- **AEC**: SUBMIT PC1-N for repair ..... N/A ☑ or ☐
- **OTFD**: ESTABLISH work protection for repair ..... N/A ☑ or ☐
- **AEC**: SIGN-ON to work protection ..... N/A ☑ or ☐
- **AEC**: REPAIR leak(s) ..... N/A ☑ or ☐
- **AEC**: NOTIFY OTFD for disposal of D2O from leak(s) ..... N/A ☑ or ☐
- **AEC**: SURRENDER work protection ..... N/A ☑ or ☐
- **OTFD**: REMOVE work protection ..... N/A ☑ or ☐
- **OTFD**: REPEAT OPT per step 4.410 ..... N/A ☑ or ☐

Flow Path to here

4.4.15 **OTFD**: NOTIFY AEC prior to performing D2O transfer in subsequent step ..... ☐

4.4.16 **OTFD**: TRANSFER D2O from the HWMB to a Unit HT Storage Tank per D2O Management Sheet in support of OPT on valve 0-38110-V941 spool assembly ..... ☐

4.4.17 **AEC**: WITNESS OPT on valve 0-38110-V941 spool assembly per ITP ..... ☐

4.4.18 **AEC**: IF leak(s) observed during OPT on valve 0-38110-V941 spool assembly THEN:

- **AEC**: NOTIFY OTFD immediately ..... N/A ☐ or ☐
- **OTFD**: TERMINATE D2O transfer ..... N/A ☐ or ☐
- **AEC**: SUBMIT PC1-N for repair ..... N/A ☐ or ☐
- **OTFD**: ESTABLISH work protection for repair ..... N/A ☐ or ☐
- **AEC**: SIGN-ON to work protection ..... N/A ☐ or ☐
- **AEC**: REPAIR leak(s) ..... N/A ☐ or ☐
- **AEC**: NOTIFY OTFD for disposal of D2O from leak(s) ..... N/A ☐ or ☐
- **AEC**: SURRENDER work protection ..... N/A ☐ or ☐
- **OTFD**: REMOVE work protection ..... N/A ☐ or ☐
- **OTFD**: REPEAT OPT per step 4.4.16 ..... N/A ☐ or ☐

4.4.19 **AEC**: INSTALL pink banding on new tie-in piping to identify fluid per N-STM-01110-10001 ..... ☐

4.5 Remove Scaffolding and Rubber Area(s)

4.5.1 **TRD**: SURVEY rubber area(s) for contamination prior to removal of scaffolding ..... ❑

4.5.2 **AEC**: IF contamination found THEN:

- **AEC**: DECONTAMINATE area ..... N/A ❑ or ❑
- **TRD**: RESURVEY area for contamination per step 4.5.1 ..... N/A ❑ or ❑

4.5.3 **AEC**: REMOVE scaffolding ..... ❑

4.5.4 **MS**: REMOVE rubber area ..... ❑

5.0 ACCEPTANCE

5.1 Acceptance Criteria

5.1.1 Successful completion of all workplan activities.

5.2 Acceptance Verification

5.2.1 **AEC**: VERIFY workplan, CWPs, ITPs, and WO tasks completed and signed off ..... ❑

Name: _____ Initials: _____

6.0 RETURN TO NORMAL

System will be returned to normal following completion of section 4.0 of this workplan.

7.0 POST REQUISITES

7.1.1 **AEC**: REMOVE signage, tools, and equipment from work area ..... ❑

7.1.2 **AEC**: REMOVE waste from work area or TAG waste and NOTIFY MS for disposal.. ❑

7.1.3 **OTFD**: PERFORM walkdown of modifications applicable to flowsheet NK38-FXX-38110-0501 ..... ❑

7.1.4 **OPG MTL**: PROVIDE flow rate test data from ~~step 4.4.11~~ NK38-WPL-33850-0565614 to Refurbishment PHT SRE (Alana Osmond) ..... ❑

7.1.5 **OPG MTL**: CONFIRM with Refurbishment PHT SRE that flow rate test data is acceptable ..... ❑

7.1.6 **AEC MTL**: SUBMIT copy of Master Workplan to OPG Records ..... ❑

8.0 REQUIREMENTS

N/A

9.0 TERMS AND DEFINITIONS

See OPG N-LIST-08120-10002, "Approved Acronym and Abbreviation List" for standard OPG acronyms and abbreviations.

Other acronyms and abbreviations used in this Workplan are:

Acronym or Abbreviation	Description
AEC	AECON-SLN Joint Venture
CA	Contract Administrator
CDAC	Concrete Drilling and Anchor Card
CMO	Contract Management Office
CWP	Comprehensive Work Package
EAC	Excavation Activity Card
EC	Engineering Change
ERT	Emergency Response Team
FE	Field Engineering
FME	Foreign Material Exclusion
ITP	Inspection and Test Plan
MTL	Modification Team Leader
MC	Control Maintenance
MS	Civil Maintenance
NDE	Non-Destructive Examination
OHSA	Occupational Health and Safety Act
OPS	Unit Operations
OPT	Operational Pressure Test
OTFD	TRF Operations
PJB	Pre-Job Brief
PPE	Personal Protective Equipment
RP	Radiation Protection
RPC	Radiation Protection Coordinator
SATM	Space Allocation and Transient Materials
SERM	Shift Emergency Response Maintainer
SWP	Safe Work Plan
TP	Terminal Point
TRD	Radiation Technician
WO	Work Order

10.0 SUMMARY OF CHANGES

Revision Number	Summary of Changes
0	Initial issue

11.0 APPENDICES

Appendix A: Reactor Safety Review Checklist

MASTER COPY

Work Order: 2910081		
Work Plan Number: NK38-WPL-38110-0457864	Rev: 0	Page 28 of 29
Usage Classification: REFERENCE	Unit: 0	
Title: TIE-IN TO PHT D2O SUPPLY SYSTEM – 0-38110-V940 & V941		

Reactor Safety Review Checklist

The following checklist is to be completed by the author of the workplan prior to submission for review. Refer to the reactor safety review guidelines for detailed description of each step of the checklist. *NA44/NK30/NK38-OPP-03600, Operating Policies and Principles

1. Are there any OP&P considerations associated with this workplan? If yes, OP&P section included in the workplan.	☒ ☒	YES YES	☐	NO
2. Does this plan include backout provisions? (Specific to the plan)	☒	YES	☐	N/A
3. Are workplan prerequisites clearly identified on front of plan?	☒	YES	☐	N/A
4. Does this work affect the in-service or standby heat sinks (See AIM Part A) If yes, all OP&Ps, approvals and recall times have been addressed.	☐ ☐	YES YES	☒	NO
5. Does this work affect containment boundary? If yes, all OP&Ps, approvals and testing have been addressed	☐ ☐	YES YES	☒	NO
6. Is this work on a component or channel of a standby safety system or reactor control system? (See NA44/NK30/NK38-OPP-03600, Appendix A). If yes, all OP&Ps, approvals and testing have been addressed.	☐ ☐	YES YES	☒	NO
7. Have review requirements from Reactor Safety, CNSC and line organization been specified? (for CNSC approvals, Refer To N-PROC-RA-0053, Evaluation of Proposed Changes for Canadian Nuclear Safety Commission Approval or Notification) All approvals attached?	☒ ☒	YES YES	☐	NO
8. For all modified systems or components, approvals have been obtained and all documentation prepared. Seismic requirements considered? Have seismic requirements for installation equipment (eg, cranes, tools, lifts, etc.) been considered (refer to N-PROC-MA-0031)?	☒	YES	☐	N/A
9. Has usage level for this plan been specified?	☒	YES		
10. Pre-Testing and/or Post Maintenance Testing Required? Pass/Fail Criteria Specified? Logic testing considered?	☒ ☒ ☒	YES YES YES	☐	NO
11. For work requiring system opening, has Foreign Material Exclusion been addressed (N-PROC-MA-0018, Foreign Material Exclusion).	☒	YES	☐	N/A
12. For work in steam protected rooms, reference to NK38-SMP-20600-07, Steam Protection Doors Maintenance has been addressed.	☐	YES	☒	N/A
13. Have Chemical Considerations been addressed? Are chemicals compatible (refer to N-INS-01806-10000, Chemical Colour Classification and Labeling Instruction and N-GUID-09701-10024, Nuclear Projects – Chemical Requirements Guide)?	☐ ☐	YES YES	☒ ☒	N/A N/A

Work Order: 2910081		
Work Plan Number: NK38-WPL-38110-0457864	Rev: 0	Page 29 of 29
Usage Classification: REFERENCE	Unit: 0	
Title: TIE-IN TO PHT D2O SUPPLY SYSTEM – 0-38110-V940 & V941		

The following mark-ups were made on 25-Oct-2016:

- Removed all references to radiography as Class 6 piping only requires visual inspection.
- Added steps to identify valves 0-38110-V940 and 0-38110 V941 as Terminal Points (TP) and devices locked for work protection.
- Added steps to apply RSA TCR to valves 0-38110-V940 and 0-38110 V941 to ensure they are closed and locked after installation
- Added verification step 3.6.4 to ensure new equipment tags are installed correctly per N-PROC-OP-0034.

Prepared by: Jeff Ezard Date: 25-OCT-2016

Verified by: Date: 25 OCT 2016

Approved by: Date: 2016/10/02

The following mark-ups were made on 28-Nov-2016:

- Removed steps associated with performing a flow rate test as this test will be performed per NK38-WPL-33850-0565614 and WO task 4847430-54 following installation of the isolation bellows.
- Added/revised steps associated with operational pressure testing to allow OPT on valve 0-38110-V940 spool assembly to be performed by means of re-circulating D2O through the HWMB HT D2O S&I System and OPT on valve 0-38110-V941 spool assembly to be performed by means transferring D2O from the HWMB to a Unit HT Storage Tank.

Prepared by: Jeff Ezard Date: 28-NOV-2016

Verified by: EBRAHEEM W. Date: 28-NOV-2016

Approved by: TOM BIAR for CHRIS COURT. Date: 28-NOV-2016.

ONTARIOPOWER GENERATION

Internal Use Only

Unit: 0	USI: 38110	Device: L433 & L486
Date:7-Nov-2016		Work Order: 3175001

Darlington Nuclear

WORKPLAN

NK38-WPL-38110-0616951-REV 0

FINAL TIE-IN TO HWMB HT D2O SUPPLY & INVENTORY SYSTEM

Unit(s): 0

Usage Classification: REFERENCE

Radiological Classification: MEDIUM HAZARD

Design EC: 120421

Master EC: 88528

Project: 16-31555

~~MASTER COPY~~

COPY
2016-Nov-30

This page has been left blank intentionally.

WORK ORDER #:	UNIT #:	USI/SCI #:	SYSTEM:	WORK PLAN #:	REV:	Page
3175001	0	38110	HWMB HT D2O S&I System	NK38-WPL-38110-0616951	0	3 of 29

ROUTING SEQUENCE: **FINAL**

	SIGNATURE:	DATE:
1. PREPARED: Jeff Ezard		9-Nov-2016
2. VERIFIED: Glenn Parker		9 Nov 2016
3. REVIEWS (as required) RADIATION/CONVENTIONAL HIGH HAZARD WORK ☐		
☐ Nuclear Safety		
☒ Radiation Protection – ALARA ARIF RAI		9 Nov 2016
☒ Engineering ANDREW MAZZEI		9 Nov 2016
☒ Conventional Safety KIRBY GOFMAN		9 Nov 2016
☐ Chemistry		
☒ Operations GLEN BARTON		9 Nov 2016
☐ Maintenance		
☐ Environment		
☒ Construction JAKE COULE		9 Nov 2016
☐		
☐		
☐ ZONE 3 WORK - DRAFT COPY TO *RADIATION CONTROL - ALARA* FOR INFORMATION - reference N-PROC-RA-0027		

UNIT CONDITION: N/A

ECN/PCP/DCO#:120421

TITLE: FINAL TIE-IN TO HWMB HT D2O SUPPLY & INVENTORY SYSTEM

IPTE: YES ☐ NO ☒

OBJECTIVE:
This workplan describes the steps required to complete the final tie-in of the Heavy Water Management Building (HWMB) Heat Transport (HT) D2O Supply and Inventory (S&I) System to the new HWMB West Annex.

SELF CHECK ✓

DATE ISSUED:

ISSUED BY:

LOCATION/PHONE #:

4. ASSESSMENT (as required)... ☐ REPEAT WORKPLAN Previously Assessed Under WO#

Assessment Required	Work Group	Worker Numbers # hrs/worker	Work Protection Required	Material Required	PRINT NAME AND INITIAL	DATE
☐ Operator	OP		☐	☐		
☐ Planning	PL		☐	☐		
☐ Control Mtce	MC		☐	☐		
☐ Mechanical Mtce.	MM		☐	☐		
☐ Civil Mtce	MS		☐	☐		
☐ Modifications	B		☐	☐		
☐ ERT			☐	☐		
☐			☐	☐		

DISTRIBUTION COPIES	ATTACHMENT	LOCATION
☐ Work Control	☐	
☐ Shift Production Clerk	☐	
☐ MC	☐	
☐ MM	☐	
☐ MSS	☐	
☐ OP	☐	
☐ Modifications	☐	
☐ Assessing Clerk	☐	
☐	☐	
☐	☐	
☐	☐	
☐	☐	
☐ Vault Coordinator	☐	

APPENDIX/ATTACHMENT
A. ☐
B. ☐
C. ☐
D. ☐
E. ☐
F. ☐
G ☐
H ☐
I ☐
J ☐
K ☐

5. APPROVAL		
☒ SECTION MANAGER:	C. BANICA	09 NOV 2016
☒ SHIFT MANAGER:	Barry Boulding	9 NOV 2016
☐ HEALTH PHYSICIST:		
6. AUTHORIZATION*		
☐ LINE MANGER:		
☒ DIRECTOR OF OPERATIONS AND MAINTENANCE:		18 NOV 2016

*Refer to N-INS-08120-10011, "Workplan Preparation and Development Process" for Authorization Requirement

This page has been left blank intentionally.

TABLE OF CONTENTS

1.0 PURPOSE 7

1.1 Objective 7
1.2 Applicability 7

2.0 PRECAUTIONS, CONSIDERATIONS, LIMITATIONS 8

2.1 Preliminary Considerations 8
2.2 Reactor Safety 8
2.3 Radiological Safety 8
2.4 Conventional Safety 9
2.5 Environmental Safety 9
2.6 Chemical Consideration 9
2.7 Backout Provisions 9

3.0 PREREQUISITES 10

3.1 Measuring and Test Equipment, Special Tools and Materials 10
3.2 Performance References 10
3.3 Developmental References 12
3.4 Special Instructions 12
3.5 Installation Prerequisites 13
3.6 Pre-Fabricate Line 0-38110-L433 and 0-38110-L486 Spool Assemblies 16

4.0 DETAILED WORKPLAN INSTRUCTIONS 17

4.1 Install Line 0-38110-L486 Spool Assembly 17
4.2 Install Line 0-38110-L433 Spool Assembly 21
4.3 Remove Scaffolding and Rubber Area(s) 24

5.0 ACCEPTANCE 25

5.1 Acceptance Criteria 25
5.2 Acceptance Verification 25

6.0 RETURN TO NORMAL 25

7.0 POST REQUISITES 25

8.0 REQUIREMENTS 25

9.0 TERMS AND DEFINITIONS 26

10.0 SUMMARY OF CHANGES 26

11.0 APPENDICES 27

Work Order: 3175001		
Work Plan Number: NK38-WPL-38110-0616951	Rev: 0	Page 6 of 29
Usage Classification: REFERENCE	Unit: 0	
Title: FINAL TIE-IN TO HWMB HT D2O SUPPLY & INVENTORY SYSTEM		

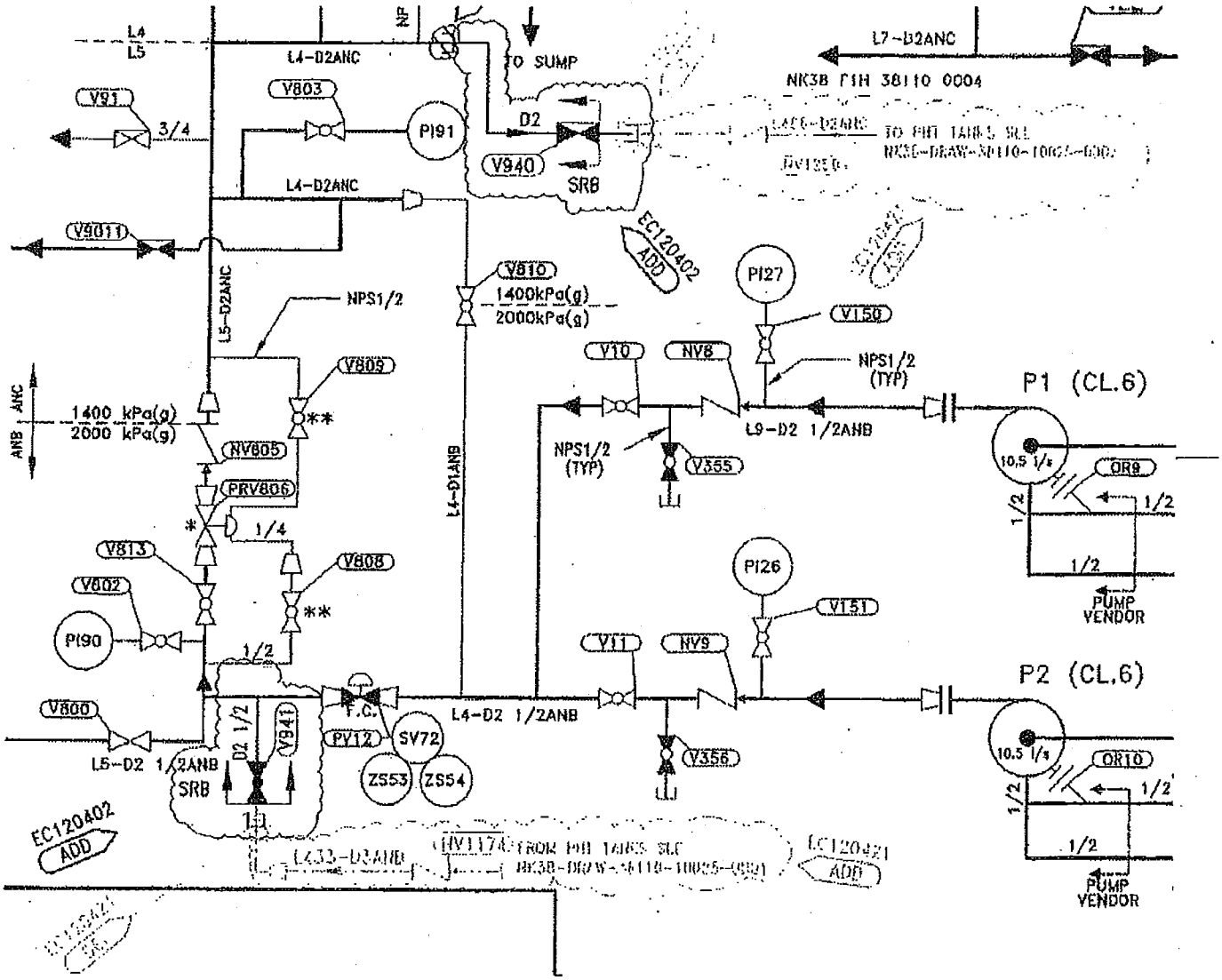

1.0 PURPOSE

1.1 Objective

This workplan describes the steps required to complete the final tie-in of the Heavy Water Management Building (HWMB) Heat Transport (HT) D2O Supply and Inventory (S&I) System to the new HWMB West Annex.

1.2 Applicability

This Workplan applies to the following equipment:

Unit	System (USI/SCI)	Equipment/Component	Elevation and Location
0	38110	L433	HWMB, EL. 87.000, RM D-001
0	38110	L486	HWMB, EL. 87.000, RM D-001

Verify the proper field equipment nomenclature prior to field device manipulation (UNIT-SCI-DEVICE)

2.0 PRECAUTIONS, CONSIDERATIONS, LIMITATIONS

2.1 Preliminary Considerations

2.1.1 In accordance with Section B 1.5.7 of NK38-OPP-03600, *Operating Policies and Principles*, Design Authority (DA) approval has been obtained as indicated by the approved Engineering Change (EC) Package(s) listed in Section 3.2.1 of this workplan. Director of Operations and Maintenance (DOM) approval has been obtained as indicated by the applicable signature on this workplan.

2.1.2 The Master copy of this workplan shall be retained in the HWMB Work Control Area (WCA) D-118 and progress shall be updated daily.

2.1.3 A copy of this workplan shall be available at the work location and should be referred to periodically or as often as necessary to confirm that the correct workplan steps are performed.

2.1.4 This workplan will be executed by a qualified ES-MSA vendor. Unless otherwise noted, the vendor will perform work under their Quality Assurance (QA) program. OPG will perform Quality Surveillance (QS) only.

2.1.5 Inspection and Test Plans (ITP) to be prepared per the vendor's QA program. Operational pressure tests (OPT) of the final tie-ins shall be performed in parallel with commissioning of the HWMB West Annex HT piping and are excluded from the scope of this workplan.

2.1.6 Vendor to prepare Safe Work Plans (SWP) and conduct Pre-Job Briefs (PJB) for their work.

2.2 Reactor Safety

N/A

2.3 Radiological Safety

2.3.1 This work will be performed in Zone 3 within the HWMB.

2.3.2 Refer to task-specific Radiological Exposure Permit (REP) for radiological requirements and backout conditions associated with this workplan.

2.4 Conventional Safety

2.4.1 All work will be planned as per OPG-PROC-0129, *Safe Work Planning*. There are no unique conventional safety hazards associated with the execution of this workplan.

2.4.2 All precautions associated with N-STW-04800-10000, *Welding and Grinding Health and Safety*, and N-PROC-RA-0057, *Control of Ignition Sources and Hot Work Activities*, shall be taken for protection against hazards associated with welding activities. Ignition Source Permits will be required for all hot work activities.

2.5 Environmental Safety

2.5.1 Waste disposal will be controlled and executed per D-INS-79000-10001, *Waste Disposal Guidelines for Oil and Chemical Wastes at Darlington*, D-INS-79000-10002, *Waste Disposal Guidelines for Solid Waste and Recycling at Darlington*, and N-FORM-11155, *Waste Disposal Plan.*

2.5.2 Spill prevention, assessment, and response to spills will be controlled and executed per D-INS-07290-10000, *Darlington Spill Prevention and Contingency Plan.* All spills shall be immediately reported to the CMO.

2.6 Chemical Consideration

N/A

2.7 Backout Provisions

When unexpected (i.e., outside the bounds of this workplan) or unsafe working conditions are encountered, STOP all work, leave the work place in a safe state (if safe and practical to do so), and notify supervisor. In the event of a radiological alarm, direction shall be provided by the Radiation Protection Coordinator (RPC).

2.7.1 Special Backout Provisions

In the event that valve 0-38110-V940 passes and cannot be used for isolation, then backout of the workplan and proceed as follows:

- Stop work, backup isolation, and repair valve 0-38110-V940. Pipe banding may be used to mitigate D2O leakage until repair is complete. Repair must ensure that valve 0-38110-V940 can be used for isolation before final tie-in of line 0-38110-L486 can proceed.

3.0 PREREQUISITES

3.1 Measuring and Test Equipment, Special Tools and Materials

3.1.1 Tools and Equipment

All measuring and test equipment required to execute the activities in this workplan shall be supplied by the vendor and calibrated per their QA program.

3.1.2 Materials

Document Number	Title
NK38-BOM-38009-10012	DBOM FOR NK38-DRAW-38009-10047 – EC120421 WEST ANNEX 87 M EL. TIE IN PIPING

3.2 Performance References

3.2.1 Engineering Change (EC) Packages

EC Number	Title
Master EC 88528	0-38000-MASTER-DNGS HEAVY WATER MANAGEMENT BUILDING WEST ANNEX
Design EC 120421	0-38110-DESIGN-D2O TANKS, PIPING & EQUIPMENT FOR D2O SUPPLY (PHT/MODERATOR) IN HWMB WEST ANNEX

3.2.2 Work Orders

Work Order Number	Title
3175001	NR CP0100-1 DEC:120421 HWMB ANNEX D20 SUP PIPING TO EX HWMB

3.2.3 Drawings

Document Number	Title
NK38-D0H-38009-0008	D2O MGMT BLDG FL EL 87.000 COL ROW DA1-DC LINE D3- D4 D2O SUPPLY CLEAN UP AND TRANSFER SYSTEM PIPING
NK38-D1H-38219-0021	D2O MANAGEMENT BUILDING FL EL 87.000 P2 D2O LIQUID RECOVERY PIPING
NK38-F0H-38110-0001	D2O MANAGEMENT BLDG. D2O SUPPLY SYSTEM FLOW DIAGRAM
NK38-DRAW-38009-10047	HWMB EL. 87.000 TIE-IN ISOMETRIC PIPING

NOTE: Refer to EC change papers for a comprehensive list of drawings.

3.2.4 Flowsheets

Document Number	Title
NK38-FEX-38210-0501	D2O MANAGEMENT BUILDING AND TRF D2O LIQUID RECOVERY SYSTEM
NK38-FXX-38110-0501	D2O MANAGEMENT BUILDING D2O SUPPLY SYSTEM

3.2.5 Procedures

Document Number	Title
D-INS-07290-10000	Darlington Spill Prevention and Contingency Plan
D-INS-79000-10001	Waste Disposal Guidelines for Oil And Chemical Wastes at Darlington
D-INS-79000-10002	Waste Disposal Guidelines for Solid Waste and Recycling at Darlington
N-INS-09070-10001	Space Allocation for Transient Material and Extended Storage of Material and Equipment
N-INS-09100-10005	Correct Component Verification
N-PROC-MA-0012	Work Protection
N-PROC-MA-0018	Foreign Material Exclusion
N-PROC-OP-0027	Temporary Change Records
N-PROC-OP-0034	Equipment Labelling
N-PROC-RA-0015	Contamination Control While Performing Work
N-PROC-RA-0017	Segregation and Handling of Radioactive Waste
N-PROC-RA-0027	Radioactive Work Planning, Execution, and Close Out
N-PROC-RA-0057	Control of Ignition Sources and Hot Work Activities
OPG-PROC-0129	Safe Work Planning
OPG-PROC-0130	Management of Hazardous Physical Agents
OPG-PROC-0133	Temporary Safety Warning Signs and Warning Barriers
OPG-PROC-0136	Falling Object Prevention
OPG-PROC-0137	Fall Protection

3.2.6 Forms

Document Number	Title
N-FORM-10024	Pre-Job Briefing and Post-Job Debriefing
N-FORM-10036	Foreign Material Exclusion Plan
N-FORM-10241	Ignition Source Permit
N-FORM-10540	Temporary Change Record
N-FORM-11155	Waste Disposal Plan
OPG-FORM-0084	Safe Work Plan

3.2.7 Manuals

Document Number	Title
N-MAN-08965-10001	Conventional Safety Technical Basis
N-STM-01110-10001	Nuclear Construction Requirements Manual

3.2.8 Applicable Standards, Codes, and Policies

Document Number	Title
N-STD-AS-0002	Procedure Use and Adherence
N-STD-MA-0008	Station Material Condition and Housekeeping
N-STW-04800-10000	Welding and Grinding Health and Safety
NK38-OPP-03600	Operating Policies and Principles

3.3 Developmental References

Document Number	Title
NK38-CORR-38000-0535194	Memorandum of Understanding – HWMB West Annex Project 16-31555, Mechanical Energization and AFS Strategy
NK38-WPL-38110-0457864	TIE-IN TO PHT D2O SUPPLY SYSTEM – 0-38110-V940 & V941

3.4 Special Instructions

N/A

3.5 Installation Prerequisites

NOTE

- Sections 3.5 and 3.6 can be done in parallel.
- Steps in Section 3.5 can be performed in any logical order.
- Steps in Section 3.5.1 and 3.5.2 are to be done daily or as often as necessary to facilitate execution of work.

3.5.1 General – Aecon

- **AEC**: PREPARE SWP(s) ..... ☑
- **AEC**: PREPARE CWP(s) ..... ☑
- **AEC**: PREPARE ITP(s) ..... ☑
- **AEC**: PREPARE Foreign Material Exclusion (FME) Plan ..... ☑
- **AEC**: PREPARE Ignition Source Permit(s) ..... ☑
- **AEC**: SUBMIT flowsheet mark-ups for NK38-FXX-38110-0501 incorporating applicable changes from EC 120421 ..... ☑
- **AEC**: INITATE following TCRs per N-PROC-OP-0027 and COMPLETE N-FORM-10540 ..... ☑

TCR #	Device(s)	Description
DA 32890	0-38110-V940	Ensure valve 0-38110-V940 remains closed prior to OPT
DA 32891	0-38110-V941	Ensure valve 0-38110-V941 remains closed prior to OPT

- **AEC**: OBTAIN Work Authorization (WA) ..... ☑
- **AEC**: ESTABLISH safe work area(s) ..... ☑
- **AEC**: ESTABLISH & MAINTAIN SATM area(s), as required ..... ☑
- **AEC**: ERECT scaffolding, as required, to facilitate access to work areas ..... ☑

Work Order: 3175001		
Work Plan Number: NK38-WPL-38110-0616951	Rev: 0	Page 14 of 29
Usage Classification: REFERENCE	Unit: 0	
Title: FINAL TIE-IN TO HWMB HT D2O SUPPLY & INVENTORY SYSTEM		

- **AEC**: ERECT vented tenting connected to contaminated exhaust system per N-PROC-RA-0015 ☑
- **AEC**: SETUP and/or STAGE sufficient catch containment in rubber area(s) ☑
- **AEC**: STAGE pipe banding material to mitigate leaks in the event of passing isolation ☑
- **AEC**: NOTIFY RP two (2) days in advance of requiring RPC support ☑

3.5.2 General – OPG

NOTE

- Separate TCR Flowsheet Action Requests (FAR) shall be prepared for lines 0-38110-L433 and 0-38110-L486 as these lines will be installed separately; for each line, TCR FAR will remove the cap and show a connection to the new HWMB West Annex HT piping.

- **SRE**: INITIATE TCR Flowsheet Action Request (FAR) to mark-up flowsheet NK38-FXX-38110-0501 to incorporate completion of line 0-38110-L433 ..... ☑
  - TCR FAR # DA32596
- **SRE**: INITIATE TCR Flowsheet Action Request (FAR) to mark-up flowsheet NK38-FXX-38110-0501 to incorporate completion of line 0-38110-L486 ..... ☑
  - TCR FAR # DA32857

NOTE

- The following steps may not be required if rubber area(s) and monitoring are already in place.

- **MS**: SETUP rubber area(s) ..... N/A ☑ or ☐
- **TRD**: SETUP remote monitoring system (ICAM) at tie-in locations ..... N/A ☑ or ☐
- **TRD**: SETUP Portable Tritium Monitor inside rubber area(s) with alarm set at 80% of upper limit of REP for tritium ..... N/A ☑ or ☐
- **TRD**: SETUP Portable Tritium Monitor outside rubber area(s) with alarm set at 0.5 MPCa ..... N/A ☑ or ☐
- **TRD**: CONFIRM vented tenting is properly connected to contaminated exhaust per N-PROC-RA-0015 ..... N/A ☑ or ☐
- **OTFD**: CONFIRM contaminated exhaust ventilation is in service ..... ☐
- **TRD**: PLACE rubber area(s) in service ..... N/A ☑ or ☐

Work Order: 3175001		
Work Plan Number: NK38-WPL-38110-0616951	Rev: 0	Page 16 of 29
Usage Classification: REFERENCE	Unit: 0	
Title: FINAL TIE-IN TO HWMB HT D2O SUPPLY & INVENTORY SYSTEM		

3.6 Pre-Fabricate Line 0-38110-L433 and 0-38110-L486 Spool Assemblies

3.6.1 **AEC**: PERFORM FME inspections of piping material per FME plan..... ☑

3.6.2 **AEC**: FABRICATE line 0-38110-L433 and 0-38110-L486 spool assemblies per CWP..... ☑

3.6.3 **AEC**: PERFORM hydrostatic test of spool assemblies per ITP..... ☑

3.6.4 IF hydrostatic test fails
THEN:

- **AEC**: REPAIR spool assembly.....N/A ☑ or ☐
- **AEC**: REPEAT hydrostatic test per step 3.6.3.....N/A ☑ or ☐

3.6.5 **AEC**: INSTALL FME covers on spool assemblies per FME plan ..... ☑

The following markup were made on Nov 25, 2016. in Section (4.1.3, 4.1.19, 4.2.2, 4.2.13) where Section 2.2.7 from N-PROL-MA-0012 was referred were corrected with Section 2.2.6(b).

Prepared by Kevin Kim 25 Nov 2016

Verified by Andrew Segal 25 Nov 2016

Approved by John McDonald 25 Nov 2016

Work Order: 3175001		
Work Plan Number: NK38-WPL-38110-0616951	Rev: 0	Page 17 of 29
Usage Classification: REFERENCE	Unit: 0	
Title: FINAL TIE-IN TO HWMB HT D2O SUPPLY & INVENTORY SYSTEM		

4.0 DETAILED WORKPLAN INSTRUCTIONS

4.1 Install Line 0-38110-L486 Spool Assembly

NOTE

- Steps 4.1.1 and 4.1.2 shall be performed on an ongoing basis until Section 4.1 is complete.

4.1.1 **TRD**: PERFORM regular contamination surveys in rubber area ..... ☐

4.1.2 IF contamination exceeding rubber area limit is found
THEN:

- **AEC/TRD**: DECONTAMINATE affected area, as required .....N/A ☐ or ☐
- **TRD**: REPEAT survey per step 4.1.1.....N/A ☐ or ☐

NOTE

- OTFD will transfer operational control of Terminal Point (TP) valve 0-38110-V940 to AEC per Section 2.2.7 of N-PROC-MP-0012 but remain the switching agent during application of AEC work protection.

4.1.3 **OTFD**: TRANSFER operational control of valve 0-38110-V940 to AEC per Section 2.2.7 of N-PROC-MA-0012..... ☑ OC
6 (b) KK, 25Nov2016 & 25 Nov 2016 [illegible]

4.1.4 **AEC**: PREPARE work protection for isolation of line 0-38110-L486 ..... ☑ GC

NOTE

- Final tie-in of line 0-38110-L486 will occur prior to commissioning but after flushing, draining, and drying of new HWMB WA HT piping with H2O.
- The existing HT D2O piping upstream of the final tie-in location will contain HT D2O. The new HWMB WA HT piping will have been drained and dried.

4.1.5 **AEC MTL/OPG MTL**: VERIFY flushing, draining, and drying of applicable HWMB HT piping are complete:

AEC MTL Name: Jason Lowrie Initials: [illegible]

OPG MTL Name: JEFF EZARD Initials: [illegible]

4.1.6 **AEC**: ESTABLISH work protection to isolate line 0-38110-L486 per AEC LOTO Procedure..... GC ☑

ALARA

- The pipe stub downstream of newly installed valve 0-38110-V940 may contain Heat Transport D2O; therefore, cutting activities may generate loose contamination, airborne contamination, and/or tritium oxide. Catch containment shall be used to collect D2O and restrict the spread of contamination.
- In the event of passing isolation, pipe banding may be used to limit D2O leakage until isolation can be established.
- Spilled D2O must be cleaned up immediately and collected in an approved container; OTFD shall be contacted for disposal of collected D2O.
- Due to piping configuration in the HWMB, Argon 41 gamma fields greater than 2 mrem/h are expected in D-001 during (and for 2-4 hours following) on-line Moderator transfers.

4.1.7 **AEC/TRD**: ENSURE catch containment in place below pipe stub downstream of valve 0-38110-V940 ..... ☑ 2016-Dec-30

NOTE

- Steps 4.1.8 through 4.1.13 will determine integrity of isolation of newly installed valve 0-38110-V940. The final tie-in of line 0-38110-L486 cannot proceed if valve 0-38110-V940 is passing.

4.1.8 **AEC**: CUT underside of pipe stub downstream of valve 0-38110-V940 per CWP .... ☑ 2016-Dec-30

4.1.9 IF the pipe stub contains D2O
THEN:

- **AEC**: DRAIN D2O into catch containment.....N/A ☑ or ☐
- **AEC**: NOTIFY OTFD for disposal of collected D2O.....N/A ☑ or ☐

2016-Dec-30

Work Order: 3175001		
Work Plan Number: NK38-WPL-38110-0616951	Rev: 0	Page 19 of 29
Usage Classification: REFERENCE	Unit: 0	
Title: FINAL TIE-IN TO HWMB HT D2O SUPPLY & INVENTORY SYSTEM		

4.1.10 IF the pipe stub continues to drip after initial draining per step 4.1.9
THEN:

- **AEC/OTFD**: BACKOUT and proceed per special backout instructions in Section 2.7.1 ..... N/A ☑ or ☐

2016-Dec-30

OR

IF the pipe stub does not contain D2O or stops dripping after initial draining per step 4.1.9
THEN:

- **OTFD**: RECIRCULATE D2O through the HWMB HT D2O S&I System per D2O Management Sheet ..... ☑
- **TRD**: MONITOR pipe stub downstream of valve 0-38110-V940 with portable tritium monitor ..... ☑

4.1.11 IF the pipe stub begins dripping during recirculation of D2O per step 4.1.11
THEN:

- **AEC/TRD**: NOTIFY OTFD immediately ..... N/A ☑ or ☐
- **OTFD**: TERMINATE recirculation of D2O ..... N/A ☑ or ☐
- **AEC**: COLLECT passing D2O in catch containment ..... N/A ☑ or ☐
- **AEC**: NOTIFY OTFD for disposal of D2O from leak(s) ..... N/A ☑ or ☐
- **AEC/OTFD**: BACKOUT and proceed per special backout instructions in Section 2.7.1 ..... N/A ☑ or ☐

2016-Dec-30

OR

IF the pipe stub does not drip during recirculation of D2O per step 4.1.11
THEN:

- **AEC/OTFD**: CONFIRM integrity of isolation is suitable to complete final tie-in of line 0-38110-L486 ..... ☑ 2016-Dec-30
- **AEC MTL**: OBTAIN approval to proceed with final tie-in of line 0-38110-L486:

OPG Project Manager (or delegate): JEFF EZARD Initials: JE
FOR ANTHONY COLELLA

Work Order: 3175001		
Work Plan Number: NK38-WPL-38110-0616951	Rev: 0	Page 20 of 29
Usage Classification: REFERENCE	Unit: 0	
Title: FINAL TIE-IN TO HWMB HT D2O SUPPLY & INVENTORY SYSTEM		

4.1.12 **AEC**: REMOVE pipe cap downstream of valve 0-38110-V940 per CWP ..... ☑

4.1.13 **AEC**: PERFORM FME inspections per FME plan ..... ☑

4.1.14 **AEC**: INSTALL line 0-38110-L486 spool assembly per NK38-D0H-38009-0008 and CWP ..... ☐

4.1.15 **AEC**: PERFORM visual inspection of all welds per ITP ..... ☐

4.1.16 **OTFD**: APPLY TCR # DA 32870 to ensure valve 0-38110-V940 remains closed prior to OPT ..... ☐

4.1.17 **OTFD**: INSTALL, VERIFY, and ACCEPT TCR FAR # DA 32857 to incorporate completion of line 0-38110-L486 on flowsheet NK38-FXX-38110-0501 .. ☐

4.1.18 **AEC**: REMOVE work protection ..... ☐

4.1.19 **AEC**: RETURN operational control of valve 0-38110-V940 to OTFD per Section 2.2.~~7~~6(b) of N-PROC-MA-0012 ..... ☐

6(b) 25 Nov 2016 25 Nov 2016

4.2 Install Line 0-38110-L433 Spool Assembly

NOTE

- Steps 4.2.1 and 4.2.2 shall be performed on an ongoing basis until Section 4.2 is complete.

4.2.1 **TRD**: PERFORM regular contamination surveys in rubber area ..... ☐

4.2.2 IF contamination exceeding rubber area limit is found
THEN:

- **AEC/TRD**: DECONTAMINATE affected area, as required .....N/A ☐ or ☐
- **TRD**: REPEAT survey per step 4.2.1.....N/A ☐ or ☐

NOTE

- OTFD will transfer operational control of Terminal Point (TP) valve 0-38110-V941 to AEC per Section 2.2.7 of N-PROC-MP-0012 but remain the switching agent during application of AEC work protection.

4.2.3 **OTFD**: TRANSFER operational control of valve 0-38110-V941 to AEC per Section 2.2.7 of N-PROC-MA-0012..... ☐
6(b) KF 25 Nov 2016 EB 25 Nov 2016

4.2.4 **AEC**: PREPARE work protection for isolation of line 0-38110-L433 ..... ☐

NOTE

- Final tie-in of line 0-38110-L433 will occur after commissioning of new HWMB WA HT piping with D2O.
- The existing HT D2O piping upstream of the final tie-in location and the new HWMB WA HT piping downstream of the final tie-in location will contain HT D2O.

4.2.5 **AEC MTL/OPG MTL**: VERIFY commissioning of HWMB WA HT piping is complete:

AEC MTL Name: _____ Initials: _____

OPG MTL Name: _____ Initials: _____

4.2.6 **AEC**: ESTABLISH work protection to isolate line 0-38110-L433 per AEC LOTO Procedure..... ☐

ALARA

- The pipe stub downstream of newly installed valve 0-38110-V941 may contain Heat Transport D2O; therefore, cutting activities may generate loose contamination, airborne contamination, and/or tritium oxide. Catch containment shall be used to collect D2O and restrict the spread of contamination.
- In the event of passing isolation, pipe banding may be used to limit D2O leakage until isolation can be established.
- Spilled D2O must be cleaned up immediately and collected in an approved container; OTFD shall be contacted for disposal of collected D2O.
- Due to piping configuration in the HWMB, Argon 41 gamma fields greater than 2 mrem/h are expected in D-001 during (and for 2-4 hours following) on-line Moderator transfers.

4.2.7 **AEC/TRD**: ENSURE catch containment in place below pipe stub downstream of valve 0-38110-V941 ..... ❑

4.2.8 **AEC**: CUT underside of pipe stub downstream of valve 0-38110-V941 per CWP ..... ❑

4.2.9 IF the pipe stub contains D2O
THEN:

- **AEC**: DRAIN D2O into catch containment ..... N/A ❑ or ❑
- **AEC**: NOTIFY OTFD for disposal of collected D2O ..... N/A ❑ or ❑

4.2.10 IF the pipe stub continues to drip after initial draining per step 4.2.9
THEN:

- **AEC/OTFD**: BACKUP isolation until it is suitable to continue work ..... N/A ❑ or ❑

4.2.11 **AEC**: REMOVE pipe cap downstream of valve 0-38110-V941 per CWP ..... ❑

4.2.12 **AEC**: PERFORM FME inspections per FME plan ..... ❑

4.2.13 **AEC**: INSTALL line 0-38110-L433 spool assembly per NK38-D0H-38009-0008 and CWP ..... ❑

4.2.14 **AEC**: PERFORM visual inspection of all welds per ITP ..... ❑

4.2.15 **OTFD**: APPLY TCR #_____ to ensure valve 0-38110-V941 remains closed prior to OPT ..... ❑

Work Order: 3175001		
Work Plan Number: NK38-WPL-38110-0616951	Rev: 0	Page 23 of 29
Usage Classification: REFERENCE	Unit: 0	
Title: FINAL TIE-IN TO HWMB HT D2O SUPPLY & INVENTORY SYSTEM		

4.2.16 **OTFD**: INSTALL, VERIFY, and ACCEPT TCR FAR #_____ to incorporate completion of line 0-38110-L433 on flowsheet NK38-FXX-38110-0501

4.2.17 **AEC**: REMOVE work protection ..... ☐

4.2.18 **AEC**: RETURN operational control of valve 0-38110-V941 to OTFD per Section 2.2.7 of N-PROC-MA-0012 ..... ☐

6(b) KE 25 Nov 2016 & 25 Nov 2016

4.3 Remove Scaffolding and Rubber Area(s)

NOTE

- The following steps may not be required if rubber area(s) and vented tenting are required to remain in place to support commissioning activities AND will be removed per commissioning workplan(s).

4.3.1 **TRD**: SURVEY rubber area for contamination prior to removal of scaffolding and vented tenting.....N/A ❑ or ❑

4.3.2 IF contamination found
THEN:

- **AEC/TRD**: DECONTAMINATE area, as required.....N/A ❑ or ❑
- **TRD**: RESURVEY area for contamination per step 4.3.1.....N/A ❑ or ❑

4.3.3 **AEC**: REMOVE scaffolding and vented tenting.....N/A ❑ or ❑

4.3.4 **MS**: REMOVE rubber area.....N/A ❑ or ❑

5.0 ACCEPTANCE

5.1 Acceptance Criteria

5.1.1 Successful completion of all workplan activities.

5.2 Acceptance Verification

5.2.1 **AEC**: VERIFY workplan and applicable CWPs, ITPs, and WO tasks completed and signed off..... ❑

Name: _____ Initials: _____

6.0 RETURN TO NORMAL

Not applicable as this is a new system that has not yet been turned over. Turnover will occur subsequent to completion of post-installation testing (i.e., operational pressure test) and commissioning activities which are excluded from the scope of this workplan.

7.0 POST REQUISITES

7.1.1 **AEC**: REMOVE signage, tools, and equipment from work area..... ❑

7.1.2 **AEC**: REMOVE waste from work area or TAG waste and NOTIFY MS for disposal.. ❑

7.1.3 **AEC MTL**: SUBMIT copy of Master Workplan to OPG Records ..... ❑

8.0 REQUIREMENTS

N/A

9.0 TERMS AND DEFINITIONS

See OPG N-LIST-08120-10002, "Approved Acronym and Abbreviation List" for standard OPG acronyms and abbreviations.

Other acronyms and abbreviations used in this Workplan are:

Acronym or Abbreviation	Description
AEC	AECON-SLN Joint Venture
CA	Contract Administrator
CMO	Contract Management Office
CWP	Comprehensive Work Package
EAC	Excavation Activity Card
EC	Engineering Change
ERT	Emergency Response Team
FE	Field Engineering
FME	Foreign Material Exclusion
ITP	Inspection and Test Plan
MTL	Modification Team Leader
NDE	Non-Destructive Examination
OHSA	Occupational Health and Safety Act
OPS	Unit Operations
OPT	Operational Pressure Test
OTFD	TRF Operations
PJB	Pre-Job Brief
PPE	Personal Protective Equipment
RSA	Reactor Safety Alignment
RP	Radiation Protection
RPC	Radiation Protection Coordinator
SATM	Space Allocation and Transient Materials
SERM	Shift Emergency Response Maintainer
SWP	Safe Work Plan
TCR	Temporary Change Request
TP	Terminal Point
TRD	Radiation Technician
WO	Work Order

10.0 SUMMARY OF CHANGES

Revision Number	Summary of Changes
0	Initial issue

11.0 APPENDICES

Appendix A: Reactor Safety Review Checklist

Work Order: 3175001		
Work Plan Number: NK38-WPL-38110-0616951	Rev: 0	Page 28 of 29
Usage Classification: REFERENCE	Unit: 0	
Title: FINAL TIE-IN TO HWMB HT D2O SUPPLY & INVENTORY SYSTEM		

Reactor Safety Review Checklist

The following checklist is to be completed by the author of the workplan prior to submission for review. Refer to the reactor safety review guidelines for detailed description of each step of the checklist. *NA44/NK30/NK38-OPP-03600, Operating Policies and Principles

1. Are there any OP&P considerations associated with this workplan? If yes, OP&P section included in the workplan.	☒ ☒	YES YES	☐	NO
2. Does this plan include backout provisions? (Specific to the plan)	☒	YES	☐	N/A
3. Are workplan prerequisites clearly identified on front of plan?	☒	YES	☐	N/A
4. Does this work affect the in-service or standby heat sinks (See AIM Part A) If yes, all OP&Ps, approvals and recall times have been addressed.	☐ ☐	YES YES	☒	NO
5. Does this work affect containment boundary? If yes, all OP&Ps, approvals and testing have been addressed	☐ ☐	YES YES	☒	NO
6. Is this work on a component or channel of a standby safety system or reactor control system? (See NA44/NK30/NK38-OPP-03600, Appendix A). If yes, all OP&Ps, approvals and testing have been addressed.	☐ ☐	YES YES	☒	NO
7. Have review requirements from Reactor Safety, CNSC and line organization been specified? (for CNSC approvals, Refer To N-PROC-RA-0053, Evaluation of Proposed Changes for Canadian Nuclear Safety Commission Approval or Notification) All approvals attached?	☒ ☒	YES YES	☐	NO
8. For all modified systems or components, approvals have been obtained and all documentation prepared. Seismic requirements considered? Have seismic requirements for installation equipment (eg, cranes, tools, lifts, etc.) been considered (refer to N-PROC-MA-0031)?	☒	YES	☐	N/A
9. Has usage level for this plan been specified?	☒	YES		
10. Pre-Testing and/or Post Maintenance Testing Required? Pass/Fail Criteria Specified? Logic testing considered?	☒ ☒ ☒	YES YES YES	☐	NO
11. For work requiring system opening, has Foreign Material Exclusion been addressed (N-PROC-MA-0018, Foreign Material Exclusion).	☒	YES	☐	N/A
12. For work in steam protected rooms, reference to NK38-SMP-20600-07, Steam Protection Doors Maintenance has been addressed.	☐	YES	☒	N/A
13. Have Chemical Considerations been addressed? Are chemicals compatible (refer to N-INS-01806-10000, Chemical Colour Classification and Labeling Instruction and N-GUID-09701-10024, Nuclear Projects – Chemical Requirements Guide)?	☐ ☐	YES YES	☒ ☒	N/A N/A