ONTARIO POWER GENERATION

D_2O Storage Facility

Darlington Nuclear Generating Station

Value Engineering Study

Final Report

Workshop Held During:
April 2011

NCE

2011-005

2800 Fourteenth Avenue, Suite 406
Markham, Ontario L3R 0E4
T: 905.943.4443
866.NCE.VALU
866.623.8258
F: 905.943.4449
www.nceve.com

May 19, 2011
NCE Project 2011-005

Mr. Julian Read, E.I.T.
Assistant Technical Engineer, Design Project
Ontario Power Generation Inc.
PO Box 4000
Darlington Nuclear Generating Station
Bowmanville, ON L1C 3Z8

Dear Mr. Read:

Subject: **DNGS D_2O Storage Facility**
Value Engineering Study
OPG Project 16-31555
Final Report Submission

Please find enclosed five hard copies and one digital copy of our report submission for the **DNGS D_2O Storage Facility Value Engineering Study** for your use and distribution.

The report documents the results of the four-day workshop held from April 12, 2011 to April 15, 2011, in Bownmanville, ON and the subsequent post-workshop activities to provide additional documentation for consideration by the project team. During the workshop, we developed a common understanding of the challenges and opportunities, and defined the project functions. We then used a creativity session to selectively explore opportunities to improve the project, including the development of a shortlist of ideas to be considered by the project team as a path-forward strategy.

This report presents several value enhancement opportunities for the project. It is expected that these will augment selected concepts when the project is finalized.

Should you require additional information and/or clarification, please do not hesitate to contact me by telephone at **905.943.4443** or by e-mail at **david.wilson@nceve.com**.

Very truly yours,
NCE Value Engineers Inc.

David C. Wilson, P. Eng., CVS, CPF
President

2011.05.19

Table of Contents

1.0 EXECUTIVE SUMMARY 1-1
- 1.1 Introduction 1-1
- 1.2 Purpose of the VE Study 1-1
- 1.3 Project Description 1-1
  - 1.3.1 Heavy Water Management Operational Improvements 1-1
  - 1.3.2 Station Refurbishment Support 1-2
  - 1.3.3 Combined Storage Requirements 1-2
  - 1.3.4 Site Locations Considered 1-2
- 1.4 Project Cost 1-3
- 1.5 Function Analysis 1-4
- 1.6 Creativity 1-4
- 1.7 Evaluation, Development and Presentation of VE Ideas 1-4
- 1.8 Path-Forward Recommendations 1-5
- 1.9 Participants and Workshop Details 1-5
  - 1.9.1 VE Team 1-5
  - 1.9.2 Workshop Organization and Logistics. 1-6

2.0 VE RECOMMENDATIONS 2-1

3.0 STRATEGY DEVELOPMENT 3-1
- 3.1 Strategies Considered 3-1
  - 3.1.1 Preferred Site Location 3-1
- 3.2 Strategy Evaluation and Selection 3-2
  - 3.2.1 Evaluation Criteria 3-3
  - 3.2.2 Alternatives Evaluation 3-3
  - 3.2.3 Comment on Assumptions Made 3-5
  - 3.2.4 Conclusions and Recommendations 3-5

Appendices

A Workshop Agenda

B Attendance Sheets

C Background Documentation

- Project Charter, Refurbishment, Operational Improvement & Long Term D_2O Storage, N-PCH-09701-10001-N/A-R001, Ontario Power Generation, February 2011
- Darlington NGD Operational Flowsheet, Heavy Water Management System Overview Schematic, Drawing No. NK38-FEX-38000-0501-01, Ontario Hydro, March 1988
- Darlington D2O Storage Facility, Project 16-31555 - Presentation for Value Engineering Session - Ontario Power Generation, April 2011

D Cost Estimate/Analysis

E Function Generation/Determination

F Creative Idea Listing

G VE Study Procedure

List of Exhibits

Exhibit 1.1 – D_2O Storage Requirements 1-2
Exhibit 1.2 – Sites Considered by Project Team 1-3
Exhibit 1.3 - Cost Model 1-3
Exhibit 1.4 - Value Targets 1-4
Exhibit 1.5 - VE Team 1-5
Exhibit 2.1 – VE Ideas to be Considered 2-1
Exhibit 3.1 – Facility Location Opportunities 3-2
Exhibit 3.2 - Weighting Results 3-3
Exhibit 3.3 - Performance Evaluation 3-3
Exhibit 3.4 - Cost Evaluation 3-4
Exhibit 3.5 - Best-Value Evaluation 3-4
Exhibit E.1 – FAST Diagram E-1
Exhibit G.1 – Simplified Workshop Agenda G-1

THIS PAGE INTENTIONALLY BLANK

EXECUTIVE SUMMARY

NCE

1.0 EXECUTIVE SUMMARY

1.1 Introduction

This report documents the findings and recommended actions of the value engineering (VE) study of the D_2O Storage Facility proposed at the Darlington Nuclear Generating Station (DNGS) located in the vicinity of Bowmanville, ON. The VE study was undertaken in April 2011.

NCE Value Engineers Inc. conducted the VE study on behalf of the Ontario Power Generation Inc. (OPG).

1.2 Purpose of the VE Study

The purpose of the VE study was confirmed prior to the workshop to:

- review and possibly augment the proposed alternatives being considered
- study the effectiveness of the proposed solutions
- develop and/or refine concepts or components to improve performance and/or avoid cost, and add value to the corporation, while maintaining design standards and codes, safety, and reliability.

1.3 Project Description

The project combines two key initiatives:

- an expansion of the existing heavy water management functionality to provide increased D_2O storage, drum handling, and office space
- temporary storage of D_2O while the Station units are being refurbished.

1.3.1 Heavy Water Management Operational Improvements

The Tritium Removal Facility (TRF) Heavy Water Management Building (HWMB) supports Station operations by cleaning, separating, and storing reactor grade and downgraded heavy water (D_2O). Larger quantities of D_2O are transferred to the TRF through dedicated pipelines while smaller quantities are transferred in drums. Large tanks and drums are used to store both clean and dirty D_2O prior to and after processing. In addition, TRF offers a similar service to external customers (i.e. not at DNGS) including nuclear generating facilities in other part of the province and around the world. The service priority for the TRF is to support the Station. Consequently, while serving external customers is lucrative, the activities associated with the serving them are generally undertaken when facility capacity permits.

The project will add 400 m^3 of D2O storage to improve TRF utilization and to better manage the on-site inventory of low-Curie inventory to support in-service units and to meet new future needs. An OPG objective to improve its overall management and storage of drums across the entire fleet requires improved drum storage and adding the capability to clean the drums for reuse or recycling/disposal.

1.3.2 Station Refurbishment Support

OPG intends to refurbish (i.e. re-tube and replace the feeders) the Station to extend its service life during planned outages commencing in October 2016. To accomplish this, sufficient heavy water storage (1,700 m^3) must be provided to enable OPG to simultaneously refurbish two reactors at a time. This would require draining and storing the heavy water from the heat transport and moderator systems, and storing downgraded D_2O generated during decontamination activities.

1.3.3 Combined Storage Requirements

The combined D_2O storage requirements are presented in **Exhibit 1.1**.

Exhibit 1.1 – D_2O Storage Requirements

Sub-Project	Storage Requirement	Volume
TRF	High Ci D_2O	200 m^3
	Low Ci D_2O	200 m^3
	Subtotal	**400 m^3**
Refurbishment	Moderator Drain	700 m^3
	PHT Drain incl. auxiliaries	800 m^3
	Downgraded D_2O	200 m^3
Total		**2,100 m^3**

1.3.4 Site Locations Considered

The project team had reviewed potential sites at DNGS to locate the facility prior to the workshop. Four sites had emerged:

- Site A immediately west of the existing Heavy Water Management Building (HWMB)
- Site B to the southwest of the HWMB, immediately south of the existing access road located south of the oil tank farm adjacent to the fence
- Site C located immediately east of the Powerhouse
- Site D located outside the protected area (no specific site shown in **Exhibit 1.2**).

These are shown in **Exhibit 1.2**.

Exhibit 1.2 – Sites Considered by Project Team

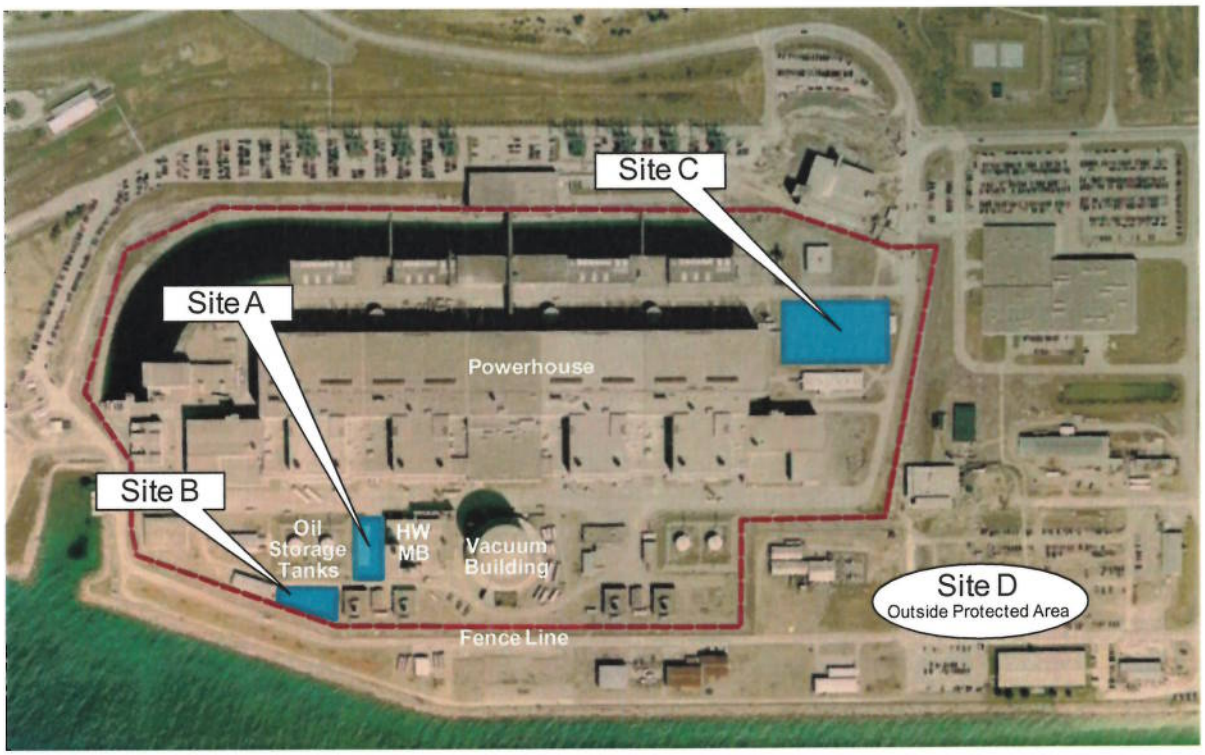

1.4 Project Cost

A comprehensive cost estimate has not been developed for the project to-date. However, an order-of-magnitude cost was assumed by the VE team for use during the VE study.

The overall cost for the project, including mark-ups, used during the VE study has been estimated to be $200 M, consisting of $150 M in project costs and $50 M in overhead costs. A cost model was developed from the cost estimate to identify project components with a high cost. Major component costs are summarized in **Exhibit 1.3**.

Exhibit 1.3 - Cost Model

Component	Capital Cost*
Building (14,500 SF)	$20,000,000
Tanks	$100,000,000
Offices	$5,000,000
Drum Facility	$5,000,000
Infrastructure	$5000,000
Equipment	$5,000,000
Site Preparation	$10,000,000
Total (not incl. overhead)	**$150,000,000**
**Cost not reconciled by VE team*	

1.5 Function Analysis

The VE team identified and categorized the functions into basic (essential), secondary, and supporting (desirable or assisting the basic) functions. The highest order (H/O) functions were identified to be *Satisfy Users* and *Satisfy Stakeholders*.

The basic functions were determined to be *Manage Heavy Water, Maintain Nuclear Safety, Protect Environment, Condition Water,* and *Operate Facility*.

The functions of the project are tabulated and classified in **Appendix E**.

The VE team also prepared a function analysis system technique diagram (FAST) to gain a better understanding of the interrelationships and dependencies of the functions. The FAST diagram is also included in **Appendix E**.

1.6 Creativity

The VE team generated **179** ideas during the creativity phase to potentially improve the project. A total of **132** ideas were ultimately considered by the VE team using the selected functions listed in **Exhibit 1.4** as value targets:

Exhibit 1.4 - Value Targets

Ref.	Value Targets	No. of Ideas
CW	Clean Water	14
CP	Construct Project	21
CR	Contain Radiation	18
HD	Handle Drums	17
HS	House Staff	18
MO	Maintain TRF Operations (during construction)	14
RW	Receive Water	10
SW	Ship Water	7
SA	Store Water	13
Total		**132**

The complete list of ideas generated by the VE team to improve the project is tabulated in **Appendix F**.

1.7 Evaluation, Development and Presentation of VE Ideas

A multi-stage evaluation method was utilized by the VE team to determine the most appropriate ideas that should be developed. The evaluation methodology is described in **Appendix G**.

Selected VE ideas developed by the VE team were reviewed with the project team on the last day of the workshop.

1.8 Path-Forward Recommendations

A summary of the VE ideas to receive further consideration is presented in **Section 2.0**. The recommended strategy is presented in **Section 3.0**. It is recognized that several ideas are complementary in nature, while others are mutually exclusive. This may influence the individual decisions for implementation. The decisionmakers (OPG Senior Management and the project team) are encouraged to actively consider how these ideas may be incorporated into the project to further improve the functionality and performance of the proposed facility, and lowering the associated life cycle costs.

From these ideas, the VE team defined a preferred strategy to:

- locate the facilities associated with the TRF operational improvements at Site A
- locate the refurbishment D_2O storage at Site C.

It is important for the decisionmakers to recognize that the strategy preferred by the VE team was premised on a number of key assumptions made during the workshop. These assumptions, referenced in **Section 3.2.3**, must be proven reasonable to ensure the validity of these preferences.

1.9 Participants and Workshop Details

1.9.1 VE Team

The VE team is listed alphabetically in **Exhibit 1.5**.

Exhibit 1.5 - VE Team

Name	Representing	Specialty
Glen Barton	OPG	TRF Operations
Susan Bragg	OPG	Environmental
Ron Chatterton	OPG	Refurb Operations
Eric Duncan	OPG	BTU Construction
Michael Ferrarelli	OPG	Design
Craig Hotrum	OPG	TRF Operations
Macy Jafarzadeh	OPG	Projects and Modifications
Connie Jones	NCE	VE Admin
Shirley Leung	OPG	Performance Engineering
Peter Moore	OPG	Projects
Curt Noel	OPG	TRF Technical
John O'Neill	OPG	Projects - MTL
Julian Read	OPG	Projects
Kevin Simmons	OPG	UO Operations
Jeff Stewart	OPG	Performance Engineering
Vince Tzambazis	OPG	Projects
David Wilson	NCE	VETL
Thomas Wong	OPG	TRF Technical

1.9.2 Workshop Organization and Logistics

The four-day VE workshop was held from April 12, 2011 to April 15, 2011 in Bowmanville, ON. The VE team was led by David Wilson, P.Eng., CVS, of NCE. The VE study was undertaken under the general direction of Julian Read, E.I.T., Assistant Technical Engineer, Design Projects, DNGS, Ontario Power Generation Inc.

VE RECOMMENDATIONS

NCE

2.0 VE RECOMMENDATIONS

The VE team identified a number of VE ideas that the project team should consider when developing the project concept. These are presented in **Exhibit 2.1**. The initial savings, future cost savings, and total life cycle costs (LCC) associated with the VE recommendations are unknown at this time.

Exhibit 2.1 – VE Ideas to be Considered

Ref.	VE Proposals
CW-01	Commissioning existing oil/water separator
CW-02	Second permanent cleaning system (fixed or skid-mounted)
CW-03	Run multiple IX (existing) simultaneously with different feed
CW-04	SARX for oil removal (currently used at PNGS)
CW-05	Install online sampling/analyzing system or GRAB sample station
CW-06	Tanks close to IX to improve efficiency of re-circulation (cleanup)
CW-07	Tie-in to existing UVO Xidizer for cleanup independent of supply feed tanks
CW-08	Facility for portable I/X column hookup for cleaning
CW-09	Clean Refurb water in the unit prior to shipping to TRF
CW-10	A number of smaller tanks for downgraded D_2O
CW-11	Ability to clean 3,500 backlog of D_2O drums
CW-12	Clean dirty water from external customers
CW-13	Resin and charcoal disposal
CW-14	De-deut tanks if new IXcu
CP-02	Provide temporary washrooms during construction
CP-03	Ensure design is constructible
CP-05	Railings on roof for roof access
CP-06	Construct in 3 phases: 1st unit refurb, 2nd unit refurb and TRF/HWMB upgrade
CP-07	Green roof
CP-08	Proper radio communication infrastructure
CP-09	Orientate equipment for ease of maintenance and operation
CP-10	Storm water management (surface and roof drains)
CP-11	Sediment and erosion control during construction
CP-13	TRF staff involved in "site technical assessment" by Design Agency
CP-14	Consider quality of soils (rad – tritium and conv – hydrocarbon)
CP-15	TRF involved in design requirements decided by Design Agency (weekly meeting representative)
CP-16	TRF staff involved in scope definition and preliminary engineering (in addition to COMS process) (weekly meeting representative)
CP-18	Modular construction
CP-19	Dedicated Traffic Officer
CP-20	Site "A" logistics preferred
CP-21	More risk to lake if construction is near lake

Exhibit 2.1 – VE Ideas to be Considered

Ref.	VE Proposals
CP-22	Sallyport scheduled entry/exit
CP-23	Prefabricate most of equipment and piping away from plant
CP-27	Need lay down area inside the fence as well
CP-29	Coordinate with other campus plan projects
CR-01	De-tritiate D_2O before storage to reduce exposure
CR-03	Double wall tank
CR-04	Control venting of cover gas to control airborne emissions
CR-05	Shielding walls for drums and tanks limit exposure
CR-06	Room tritium and gamma monitoring
CR-07	Air clean up system to handle accidental tritium emissions into room
CR-08	Seismic dike under building to contain and recover spill
CR-10	Recovery drainage for spills/leaks
CR-11	Second containment building for leaks and gas emissions
CR-12	Dryer on stack for air emissions
CR-13	Heat trace pipe to prevent D_2O freeze
CR-14	Condense vapor out of cover gas
CR-15	Best available technology/bench marking
CR-16	Sealed sumps for spill
CR-17	Use geothermal to maintain room/D_2O temperature
CR-18	Have separate facility for irradiated D_2O
CR-19	Connect stack monitor to main control computers
CR-20	Use ALARA principles
HD-02	Recycle Useless drums
HD-03	Combine chemical waste handling/processing station needs with D_2O
HD-06	Processes/procedures to make drumming a last resort
HD-10	Dedicated drum route by cart on ground or above ground tunnel
HD-11	Close to HWMB
HD-12	Drum cleaning (new)
HD-13	Use a modular drum cleaning unit
HD-14	Drum reduction program
HD-15	Pressure test drums (new)
HD-16	Have sufficient space to safely segregate the drums
HD-17	Use self priming pump to empty drums
HD-18	Include drum weigh scales
HD-19	Easy access for Operations
HD-20	Receive/ship via loading bay
HD-21	Benchmark what others do (move drums)
HD-22	Investigate drum rail system, benchmark

Exhibit 2.1 – VE Ideas to be Considered

Ref.	VE Proposals
HD-23	Provision for lifting drums (international shipping)
HS-03	Enclosed walkway to mitigate zoning restriction (if not adjacent)
HS-06	Office windows to incorporate bird friendly design (reflectivity)
HS-07	Sleeping quarters for shift workers (pilot project)
HS-08	Landfill diversion (3 R's)
HS-09	FSOS office space required (Field Shift Operation Supervisor)
HS-10	Ability to eat in the TRF/HWMB
HS-11	Work control office space required
HS-12	Meets OPG facilities standards
HS-13	Located next to HWMB/TRF
HS-14	Operation Section Manager office space required
HS-15	Hotel space for TRF technical staff
HS-16	Expand office to include some existing HWMB offices (five existing offices)
HS-17	Conference Room – PJB, meetings
HS-18	Washrooms required
HS-19	Incorporate LEED standards
HS-20	Outside access to offices
HS-22	Consider future staffing needs of the TRF/HWMB
MO-01	Build hoisting rigging equipment for drum transfer
MO-02	Lay down area outside the fence and J.I.T. delivery
MO-03	Coordinate with TRF Operations and liaison during construction and outages
MO-04	Modify TDO loading bay to accommodate drum shipments
MO-05	AFS new ventilation before constructing new building (to allow work)
MO-06	Alternate route to construction site (lessen impact on drum shipment and TDO's)
MO-07	Mobile bulk gasses (He, O2, Ar) before removing supply
MO-08	Increase class IV and class II capacity with current project (power)
MO-09	Provide temporary working location for staff in trailers during construction
MO-10	Coordinate scheduling and permitting for tie-ins with unit/TRF
MO-11	Transfer line tie-in will be a challenge (Mods before hand)
MO-12	Mods for relocation of services prior to construction
MO-13	Build east of the powerhouse (P/H) to prevent interference with operations
MO-14	Ensure what you put in you can take out
RW-01	Above ground piping
RW-07	Below ground piping
RW-10	Tankers
RW-11	Easy access in receiving shipments
RW-12	Piping interconnections to allow maximum flexibility – unit to any tank
RW-13	Human factors practices for receiving drums

Exhibit 2.1 – VE Ideas to be Considered

Ref.	VE Proposals
RW-14	Use inline pump to empty TDO's
RW-15	Radio frequency chips for drum tracking and ID
RW-16	Ability to test if it is contaminated
RW-17	Separate shipping and receiving warehouse to ease scheduling
SW-01	Maintain flow rate to station
SW-02	Maintain existing shipping methods
SW-03	Easy access for flatbed trucks for external customers
SW-04	Keep shipments from freezing
SW-05	Built-in crane for shipping containers
SW-06	Drive through unloading for TDO
SW-07	Flushing lines to remove GAD
SA-01	Chemical addition in storage tanks for moderator (poison and acid) and PHT (lithium)
SA-03	2,100m3 of additional D_2O storage required
SA-04	Agitator and sampling station for a tank(s) dedicated to poisoned moderator water
SA-05	Store OPS and refurb D_2O in separate buildings
SA-06	Tanks filled to 90% capacity
SA-09	Add isolators to vent system for work protection purposes
SA-11	Use tanks that are >100 Mg. why not 300 Mg.
SA-15	Store D_2O in drums
SA-16	Store D_2O in tanks at 1 location
SA-18	Use temporary tanks/tanker
SA-19	Store water in tanks in multiple locations
SA-21	Use temporary tanks for external customers
SA-26	Temporary tanks at D.F.S.F. for refurb duration (dry fuel storage facility)

STRATEGY DEVELOPMENT

NCE

3.0 STRATEGY DEVELOPMENT

From the outset, it was decided that the results of this VE study would be presented as one or more strategies to move the project forward rather than the traditional form of developing several value proposals. This was due to the timing of the VE study (i.e. workshop held very early in project development, workshop time constraints, and the type and detail of information available during the workshop.

This section describes the strategies considered and selected.

3.1 Strategies Considered

The VE team had identified several VE ideas that it felt should receive further consideration during subsequent stages of project development as noted in **Section 2**.

The next steps in the development of alternative strategies were to:

- identify a preferred site or sites for the facility
- review and combine ideas from the list of VE recommendations to identify a preferred alternative.

3.1.1 Preferred Site Location

The project team had explored four sites at which the proposed facility might be located. During the VE workshop, the VE team identified another location (Site T) within the existing Powerhouse. The five sites initially considered by the VE team were:

- Site A immediately west of the existing Heavy Water Management Building (HWMB)
- Site B to the southwest of the HWMB, immediately south of the existing access road located south of the oil tank farm adjacent to the fence
- Site C located immediately east of the Powerhouse
- Site D located outside the protected area (no specific site shown in **Exhibit 1.2**)
- Site T located within the east end of the Powerhouse.

The VE team subsequently abandoned Site D located outside the security perimeter as this location was not considered to be a viable location given the time constraints of the project (i.e. OPG would likely not be able to obtain the necessary approvals to permit implementation prior to April 2015.

From this, the VE team was able to develop several strategies considering where the TRF operations and refurbishment storage components of the project could be located. The matrix presented in **Exhibit 3.1** identifies the various alternatives:

Exhibit 3.1 – Facility Location Opportunities

TRF Operations	Refurbishment D_2O Storage			
	A	B	C	T
A	Alt 1	Alt 4	Alt 5	Alt 10
B	Alt 6	Alt 2	Alt 7	-
C	Alt 8	Alt 9	Alt 3	-
T	-	-	-	-

3.2 Strategy Evaluation and Selection

Workshop time constraints and a general lack of detail associated with the strategies at this time, limited the evaluation process. As such, the VE team, comprised on knowledgeable subject-matter specialists, generally drew on their experience and selected project details when considering the merits of the various alternatives.

Key considerations when assessing the options included:

- operations
  - staging impacts
  - system impacts
- security
- environmental
- site-size
- site preparation
  - tie-ins
  - utilities
  - spill remediation
- constructability
  - lay down areas
  - workzone access
  - liaison with other construction work
- design approvals
  - permits
  - EA.

The results of this assessment are presented in the following sections.

3.2.1 Evaluation Criteria

The VE team developed evaluation criteria and then weighted the performance indicators using the weighted-additive method. The results of the weighting session are presented in **Exhibit 3.2**.

Exhibit 3.2 - Weighting Results

	Criteria/Team Members	Team Member Weighting Preferences											Total	Weight (Norm)*
		1	2	3	4	5	6	7	8	9	10	11		
1	Operations	40	35	20	30	25	30	20	45	20	30	14	309	28
2	Security	5	5	5	5	5	5	0	5	4	5	14	58	5
3	Environmental	10	20	10	10	10	10	20	10	30	15	14	159	15
4	Site Size	10	10	10	15	10	10	0	10	2	10	14	101	9
5	Site Preparation	10	10	15	20	25	10	30	10	3	10	14	157	14
6	Constructability	10	10	25	15	15	30	20	10	26	20	14	195	18
7	Approvals	15	10	15	5	10	5	10	10	15	10	16	121	11
Total		100	100	100	100	100	100	100	100	100	100	100	1100	100

*Note: * Average weightings are normalized using base-100.*

3.2.2 Alternatives Evaluation

Each of the alternatives was evaluated by sub-teams, each considering one of the performance indicators. A scoring system (0-10) was used with a score of 10 representing the most preferable.

The performance evaluation results are presented in **Exhibit 3.3**.

Exhibit 3.3 - Performance Evaluation

	Criteria/Alternatives	Weight (Norm)*	VE Alt. 1 (Site A)		VE Alt. 2 (Site B)		VE Alt. 3 (Site C)		VE Alt. 4 (Site A/B)		VE Alt. 5 (Site A/C)		VE Alt. 6 (Site A/T)	
Description (Differing Elements)	Storage Tanks (1500m3)		Located at Site A		Located at Site B		Located at Site C		Located at Site B		Located at Site C		Located at Site T	
	TRF Tanks (600m3)		Located at Site A		Located at Site B		Located at Site C		Located at Site A		Located at Site A		Located at Site A	
	Offices		Located at Site A		Located at Site B		Located at Site C		Located at Site A		Located at Site A		Located at Site A	
	Drum Handling		Located at Site A		Located at Site B		Located at Site C		Located at Site A		Located at Site A		Located at Site A	
	Criteria		Score	Total	Score	Total	Score	Total	Score	Total	Score	Total	Score	Total
1	Operations	28	10	280	4	112	2	56	8	224	6	168	6	168
2	Security	5	10	50	7	35	8	40	8	40	9	45	10	50
3	Environmental	15	1	15	3	45	5	75	3	45	7	105	9	135
4	Site Size	9	5	45	4	36	10	90	8	72	9	81	4	36
5	Site Preparation	14	3	42	5	70	10	140	4	56	7	98	6	84
6	Constructability	18	5	90	3	54	10	180	1	18	8	144	3	54
7	Approvals	11	9	99	6	66	7	77	7	77	7	77	5	55
Total		100		621		418		658		532		718		582
Rank (Best Performance = 1)				3		6		2		5		1		4

Rating	Rating Definition
10	Alternative concept is *extremely* preferred
9	Alternative concept is *very strongly* preferred
8	Alternative concept is *strongly* preferred
7	Alternative concept is *moderately* preferred
6	Alternative concept is *slightly* preferred
5	Original and Alternative concept equally preferred
4	Original concept is *slightly* preferred
3	Original concept is *moderately* preferred
2	Original concept is *strongly* preferred
1	Original concept is *very strongly* preferred
0	Original concept is *extremely* preferred

The cost evaluation results are presented in **Exhibit 3.4**.

Exhibit 3.4 - Cost Evaluation

Cost Components/Alternatives		VE Alt. 1 (Site A)	VE Alt. 2 (Site B)	VE Alt. 3 (Site C)	VE Alt. 4 (Site A/B)	VE Alt. 5 (Site A/C)	VE Alt. 6 (Site A/T)
Description (Differing Elements)	Storage Tanks (1500m3)	Located at Site A	Located at Site B	Located at Site C	Located at Site B	Located at Site C	Located at Site T
	TRF Tanks (600m3)	Located at Site A	Located at Site B	Located at Site C	Located at Site A	Located at Site A	Located at Site A
	Offices	Located at Site A	Located at Site B	Located at Site C	Located at Site A	Located at Site A	Located at Site A
	Drum Handling	Located at Site A	Located at Site B	Located at Site C	Located at Site A	Located at Site A	Located at Site A
Baseline Capital Cost		$150,000,000	$150,000,000	$150,000,000	$150,000,000	$150,000,000	$150,000,000
Adjustment to Capital Cost			$17,000,000	$14,000,000	$13,000,000	$12,000,000	$2,000,000
Total Capital Cost		**$150,000,000**	**$167,000,000**	**$164,000,000**	**$163,000,000**	**$162,000,000**	**$152,000,000**
Baseline Future Cost (incl. societal costs)							
Adjustment to Future Cost			$0	$0	$0	$0	$0
Total Future Cost		**$0**	**$0**	**$0**	**$0**	**$0**	**$0**
Total Life Cycle Cost		**$150,000,000**	**$167,000,000**	**$164,000,000**	**$163,000,000**	**$162,000,000**	**$152,000,000**
Rank (Lowest Cost = 1)		1	6	5	4	3	2

Elements	VE Alt. 1 (Site A)	VE Alt. 2 (Site B)	VE Alt. 3 (Site C)	VE Alt. 4 (Site A/B)	VE Alt. 5 (Site A/C)	VE Alt. 6 (Site A/T)
	Capital Cost Adj	**Capital Cost Adj**	**Capital Cost Adj**	**Capital Cost Adj**	**Capital Cost Adj**	**Capital Cost Adj**
System Tie-ins	$0	$5,000,000	$10,000,000	$5,000,000	$10,000,000	$10,000,000
Equipment Redundancy	$0	$7,000,000	$10,000,000	$7,000,000	$10,000,000	$5,000,000
Site Remediation	$0	-$2,000,000	-$10,000,000	-$5,000,000	-$10,000,000	-$10,000,000
Flood Plain	$0	$3,000,000	$0	$3,000,000	$0	$0
Building(Envelope)	$0	$4,000,000	$4,000,000	$6,000,000	$5,000,000	$2,000,000
Building(Foundations)	$0	$0	$0	-$3,000,000	-$3,000,000	-$5,000,000
	$0					
	$0					
	$0					
	$0					
	$0					
	$0	**$17,000,000**	**$14,000,000**	**$13,000,000**	**$12,000,000**	**$2,000,000**

The best-value evaluation results are presented in **Exhibit 3.5**.

Exhibit 3.5 - Best-Value Evaluation

Cost Components/Alternatives		VE Alt. 1 (Site A)	VE Alt. 2 (Site B)	VE Alt. 3 (Site C)	VE Alt. 4 (Site A/B)	VE Alt. 5 (Site A/C)	VE Alt. 6 (Site A/T)
Description (Differing Elements)	Storage Tanks (1500m3)	Located at Site A	Located at Site B	Located at Site C	Located at Site B	Located at Site C	Located at Site T
	TRF Tanks (600m3)	Located at Site A	Located at Site B	Located at Site C	Located at Site A	Located at Site A	Located at Site A
	Offices	Located at Site A	Located at Site B	Located at Site C	Located at Site A	Located at Site A	Located at Site A
	Drum Handling	Located at Site A	Located at Site B	Located at Site C	Located at Site A	Located at Site A	Located at Site A
Performance		**621**	**418**	**658**	**532**	**718**	**582**
Total Life Cycle Cost		**$150,000,000**	**$167,000,000**	**$164,000,000**	**$163,000,000**	**$162,000,000**	**$152,000,000**
Value Ratio V ~ P/C		**4.14**	**2.50**	**4.01**	**3.26**	**4.43**	**3.83**
Rank (Most Preferred = 1)		**2**	**6**	**3**	**5**	**1**	**4**

3.2.3 Comment on Assumptions Made

The project was at a very early stage when reviewed by the VE team. As such, several assumptions had to be made in order to complete the evaluation. It was assumed that:

- site remediation costs would be greater at Site A than at Sites B, C, and T because a tritium spill was known to have occurred at Site A several years ago. It was further assumed that Site B would likely have higher remediation costs due to its proximity to Site A.
- the baseline cost of $150 M related to Site A and that costs for other sites could be guestimated from that costs applied to Site A.

3.2.4 Conclusions and Recommendations

From the evaluation, it is clear that the VE team prefers to locate the TRF operational components of the project at Site A. The evaluation also shows their preference to locate the refurbishment D_2O storage at Site C over their second choice to locate the refurbishment D_2O storage at Site A. However, care must be taken to recognize that this preference is primarily driven by constructability advantages; the tradeoff is a slightly higher capital cost. It must further be acknowledged that the scores will need to be revisited once more reliable information regarding the extent of site remediation work required and overall project construction costs become available.

THIS PAGE INTENTIONALLY BLANK

APPENDICES

NCE

APPENDIX A
WORKSHOP AGENDA

NCE

2800 Fourteenth Avenue, Suite 406
Markham, Ontario L3R 0E4
Telephone 905.943.4443
Toll Free 866.NCE.VALU
866.623.8258
Fax 905.943.4449
www.nceve.com

MEETING AGENDA

DNGS D_2O Storage Facility **Value Engineering Study** **Workshop**	Ontario Power Generation Darlington Nuclear Generating Station ESSB Room 312

Time	Study Phase	Primary Activities	Lead Responsibility
April 12, 2011			
8:00	***Information***	Welcome VE Team	Julian Read
8:15		Review VE Study Schedule	David Wilson
8:30		Present Project Overview	Project Team
9:30		Identify Goals, Constraints and, Commitments	VE Team
9:45		Present Introduction to Value Management	David Wilson
10:30	***Function Analysis***	Identify and Classify Project Functions	VE Team
11:00	***Creativity***	Brainstorm Ideas	VE Team
12:00		*Lunch*	
12:45		Brainstorm Ideas	VE Team
3:30		Adjourn	
April 13, 2011			
8:00		Re-Cap Previous Day	David Wilson
8:15		Brainstorm Ideas	VE Team
9:00	***Evaluation***	Evaluate Ideas	VE Team
12:00		*Lunch*	
12:45		Evaluate Ideas	VE Team
1:30	***Development***	Prepare VE Proposals/Strategies	VE Team
3:30		Adjourn	
April 14, 2011			
8:00		Re-Cap Previous Day	David Wilson
8:15		Prepare VE Proposals/Strategies	VE Team
12:00		*Lunch*	
12:45		Prepare VE Proposals	VE Team
3:30		Adjourn	
April 15, 2011			
8:00		Re-Cap Previous Day	David Wilson
8:15		Prepare VE Proposals	VE Team
12:00		*Lunch*	
12:45		Prepare VE Proposals	VE Team
1:30	***Presentation***	Discuss Preliminary VE Results	VE Team
3:00		Develop Path Forward	All
3:30		Adjourn	

David C. Wilson, P.Eng., CVS, CPF

THIS PAGE INTENTIONALLY BLANK

APPENDIX B
ATTENDANCE SHEETS

NCE

Value Management

Project: DNGS D_2O Storage Facility	Date: April 2011
VM Workshop Attendance – Day 1 April 12, 2011	Sheet: 1

Name	Representing	E-mail	Telephone	Specialty	FT/PT
John O'Neill	Projects - MTL	john.oneill@opg.com	905-623-6670 x 1532	Projects	FT
Macy Jafarzadeh	Projects & Modification	macy.jafarzadeh@OPG.com	905-839-1151 x 8070	VE Specialist	FT
Peter Moore	Projects & Mods	peter.moore@opg.com	905 623 6670 x 1494	Projects	FT
JEFF STEWART	PERFORMANCE ENGINEERING	jeff.stewart@opg.com	905-623-6670 ext-1663	SYSTEM ENGINEER	FT
RON Chatterton	Refurb OPERATIONS	RON.chatterton@OPG.com	x5459	operations	PT
KEVIN Simmons	Operations/O	Kevin.simmons@OPG.com	x7089	OPS-UO	FT
ERIC DUNCAN	CA CMO	ERIC.DUNCAN@OPG.Com	X 3281	BTU CONSTRUCTION	PT
GLEN BARTON	TRF OPS	GLEN.BARTON@OPG.com	X1530	OPS	FT
CURT NOEL	TRF TECH	CURT NOEL@OPG.Com	X1349	SME	FT
CRAIG Hotrum	TRF OPS	Craig.Hotrum@OPG.Com	X 4800	Operations	FT

Value Management

Project: DNGS D_2O Storage Facility				Date: April 2011	
VM Workshop Attendance – Day 1 April 12, 2011				Sheet: 2	
Name	**Representing**	**E-mail**	**Telephone**	**Specialty**	**FT/PT**
David Wilson	NCE	david.wilson@nceve.com	905.943.4443	VETL	
Vince Tzambazis	OPG Projects.	vincent.tzambazis@opg.com	905 623-6670 x1180	Project Manager	F.T.
Michael Ferrarelli	OPG Refurb.	michael.ferrarelli@opg.com	" " x5730	Design	FT
Susan Bragg	OPG - Environment	susan.bragg@opg.com	x1241	Env.	FT
CONNIE JONES	NCE	connie.jones@nceve.com	905-943-4443	VE ADMIN	FT
Shirley Leung	OPG - Performance Engineering	shirley.leung@opg.com	x1360	units 1-4 downgraded D_2O transfer	FT
Julian Read	OPG Projects	julian.read@opg.com	x1336	MTL	FT
Thomas Wong	TRF Technical	thomas.wong@opg.com	1017	Engineering	FT

Filed: 2021-04-19
EB-2020-0290
Exhibit L
D2-02-AMPCO-097
Attachment 2
Page 40 of 106

Value Management

Project: DNGS D_2O Storage Facility				Date: April 2011	
VM Workshop Attendance – Day 2 April 13, 2011				Sheet: 1	
Name	**Representing**	**E-mail**	**Telephone**	**Specialty**	**FT/PT**
Julian Read	OPG Projects	julian.read@opg.com	905-623-6670 x 1336	Projects	FT
John O'Neill	MTL Projects	john.oneill@opg.com	x 1532	Projects	FT
Macy Jafarzadeh	Projects & Mods	macy.jafarzadeh@opg.com	905-839-1151 x 8070	VE	FT
JEFF STEWART	PERFORMANCE ENGINEERING	jeff.stewart@opg.com	905-623-6670 Ext 1663	SYSTEM ENGINEER	FT
Peter Moore	Design Projects	peter.moore@opg.com	9056236670 x 1494	Projects	FT.
Ron Chatterton	Operations - Refurb	ron.chatterton@opg.com	x 5459	ops.	PT
Kevin Simmons	OPS - UO	Kevin.simmons@opg.com	7081	OPS	FT.
Glen Barton	TRF OPS	Glen.Barton@OPG.com	X 1530	OPS	FT
Curt Noll	TRF - Tech	curtnoll@opg.com	X 1349	SRE	FT
Craig Hotrum	TRF - OPS	Craig.Hotrum@opg.com	X 4800	OPS	FT

Filed: 2021-04-19
EB-2020-0290
Exhibit L
D2-02-AMPCO-097
Attachment 2
Page 41 of 106

Value Management

Project: DNGS D_2O Storage Facility				Date: April 2011	
VM Workshop Attendance – Day 2 April 13, 2011				Sheet: 2	
Name	**Representing**	**E-mail**	**Telephone**	**Specialty**	**FT/PT**
Susan Bragg	DN Environment	susan.bragg@opg.com	x1241	ENV	FT
Michael Ferrarelli	Refurbishment (design)	michael.ferrarelli@opg.com	x 5730	design	FT
V. WILLIAMS	TRF Engrg	~~gtel~~ denny.williams@opg.com	x 1012	Engrg	FT
CONNIE JONES	NCE	connie.jones@nceve.com	905-943-4443	VE ADMIN	FT
DAVID WILSON	NCE	david.wilson@nceve.com	905 943 4443	VETL	F
Thomas Wong	TRF Engineering	thomas.wong@opg.com	1017	Engineering	FT

Filed: 2021-04-19
EB-2020-0290
Exhibit L
D2-02-AMPCO-097
Attachment 2
Page 42 of 106

Value Management

Project: DNGS D_2O Storage Facility				Date: April 2011	
VM Workshop Attendance – Day 3 April 14, 2011				Sheet: 1	
Name	**Representing**	**E-mail**	**Telephone**	**Specialty**	**FT/PT**
John O'Neill	MTL - OPG Projects	john.oneill@opg.com	703-1532	Projects	FT
Julian Read	OPG Projects	julian.read@opg.com	703-1336	Projects	FT
Shirley Leung	OPG Performance Engineering	shirley.leung@opg.com	703-1360	Units' downgraded D_2O transfer	FT
Craig Holrum	TRF OPS	craig.holrum@opg.com	4800	OPERATIONS	FT
Macy Jafaradeh	Projects & Mods	macy.jafaradeh@opg.com	905-801-4151 x 8070	VE	FT
Irena Doslo	Environment	irena.doslo@opg.com	x1019	Env/ Waste	FT
Peter Moore	Projects & Mods	peter.moore@opg.com	1494	Projects	FT
Kevin Simmons	OPS	Kevin.simmons@opg.com	7081	OPS ~~Projects~~	FT
Glen Barton	TRF OPS	Glen.Barton@OPG.Com	EXT 1530	OPERATIONS	FT
Curt Noel	TRF	curt.noel@opg.com	x 1349	TECH	FT

Value Management

Project: DNGS D_2O Storage Facility				Date: April 2011	
VM Workshop Attendance – Day 3 April 14, 2011				Sheet: 2	
Name	**Representing**	**E-mail**	**Telephone**	**Specialty**	**FT/PT**
Thomas Wong	TRF Technical	thomas.wong@opg.com	1017	Engineering	FT
CONNIE JONES	NCE	connie.jones@nceve.com	905-943-4443	VE ADMIN	FT
DAVID WILSON	NCE	david.wilson@nceve.com	905.943.4443	VETL	F
Michael Ferrarelli	Refurbishment	michael.ferrarelli@opg.com	905-623-6670 x5730	Design	FT

Filed: 2021-04-19
EB-2020-0290
Exhibit L
D2-02-AMPCO-097
Attachment 2
Page 44 of 106

Value Management

Project: DNGS D_2O Storage Facility				Date: April 2011	
VM Workshop Attendance – Day 4 April 15, 2011				Sheet: 1	
Name	**Representing**	**E-mail**	**Telephone**	**Specialty**	**FT/PT**
Julian Read	OPG- Projects	julian.read@opg.com	1336	Projects	FT
John O'Neill	MTL- Projects	john.oneill@opg.com	1532	Projects	FT
Craig Hotrum	TRF- OPS	Craig.Hotrum@opg.com	4800	Operations	FT
Macy Safarzadeh	Projects & Mods	macy.safarzadeh@opg.com	701-8070	VE	FT
Shirley Leung	Performance Engineering	shirley.Leung@opg.com	703-1360	Downgraded D_2O Transfer (units)	FT
Peter Moore	Project Leader	peter.moore@opg.com	1494	Projects	FT
Glen Barton	TRF-OPS	Glen.Barton@OPG.com	EXT 1530	OPERATIONS	FT
Curt Noel	TRF -	CURT NOEL@OPG.com	x1349	TECH	FT
Kevin Simmons	OPS- UO	Kevin.Simmons@opg.com	7089	OPS	FT
Susan Bragg	DN - Environment	susan.bragg@opg.com	x1241	ENV	FT

Filed: 2021-04-19
EB-2020-0290
Exhibit L
D2-02-AMPCO-097
Attachment 2
Page 45 of 106

Value Management

Project: DNGS D_2O Storage Facility				Date: April 2011	
VM Workshop Attendance – Day 4 April 15, 2011				Sheet: 2	
Name	**Representing**	**E-mail**	**Telephone**	**Specialty**	**FT/PT**
Thomas Wong	TRF Technical	thomas.wong@opg.com	1017	Engineering	FT
Michael Ferrarelli	Refurbishment	Michael.ferrarelli@opg.com	5730	Design	FT
CONNIE JONES	NCE	connie.jones@nceve.com	905.943.4443	VE ADMIN	FT
DAVID WILSON	NCE	david.wilson@nceve.com	905.943.4443	VE TL	FT

Filed: 2021-04-19
EB-2020-0290
Exhibit L
D2-02-AMPCO-097
Attachment 2
Page 46 of 106

APPENDIX C
BACKGROUND DOCUMENTATION

NCE

Project Charter

Internal Use Only		
Document Number: N-PCH-09701-10001		
Sheet Number: N/A	Revision: R001	Page: 1 of 21

Title:
REFURBISHMENT, OPERATIONAL IMPROVEMENT & LONG TERM D2O STORAGE

© Ontario Power Generation Inc., 2011. This document has been produced and distributed for internal Ontario Power Generation Inc. purposes only. No part of this document may be reproduced, published, converted, or stored in any data retrieval system, or transmitted in any form or by any means (electronic, mechanical, photocopying, recording, or otherwise) without the prior written permission of Ontario Power Generation Inc.

Refurbishment, Operational Improvement & Long Term D2O Storage

N-PCH-09701-10001-N/A-R001

2011-02-25

Order Number: N/A
Other Reference Number: 73000

Internal Use Only

Prepared by:
Chris de Vaal
Section Manager
Infrastructure and Special Projects
Project Support Engineering
Date

Reviewed by:
Glenn Pringle
Department Manager
Project Support Engineering
Nuclear Refurbishment
Date

Reviewed by:
Perry Forbeck
Manager, TRF
Darlington
Date

Approved by:
Terry Karaim
Director, Engineering
Nuclear Refurbishment
Date

Approved by:
Frank Guglielmi
Director
Operations & Maintenance
Nuclear Refurbishment
Date

Approved by:
Bryce Phillips
Director,
Operations & Maintenance
Darlington
Date

Accepted by:
Mark Arnone
Vice President, Execution
Nuclear Refurbishment
Date

Accepted by:
Mike Peckham
Vice President
Projects and Modifications
Date

Table of Contents

Page

1.0 NEEDS STATEMENT (BACKGROUND) 6

1.1 Refurbishment - D_2O Storage 6
1.2 TRF and DN Operational Improvements D_2O Storage & Drum Handling Facilities 6
1.2.1 TRF and DN Operational Improvements D_2O Storage: 6
1.2.2 Increased drum handling capability: 7
1.2.3 Office space: 7

2.0 PROJECT OBJECTIVES (CRITICAL SUCCESS FACTORS) 8

2.1 Refurbishment - D_2O Storage 8
2.2 Operational Improvement - D_2O Storage & Drum Handling 8
2.2.1 TRF and Operational Improvements D_2O Storage 9
2.2.2 Drum Handling, Cleaning, and Testing Facility 9
2.2.3 Office Space 9

3.0 PROJECT SCOPE 9

3.1 Refurbishment - D_2O Storage 9
3.2 TRF and DN Operational Improvements D_2O Storage & Drum Handling Facilities 12
3.2.1 TRF and Operational Improvements D_2O Storage 12
3.2.2 Drum Handling, Cleaning, and Testing Facility 13
3.2.3 Office Space 13

4.0 PRIORITY/TIMING 13

4.1 Refurbishment & Operational Improvement - D_2O Storage & Drum Handling 13

5.0 FUNDING/COST 14

6.0 RESOURCING 14

7.0 AUTHORITIES AND ACCOUNTABILITIES 16

7.1 Current Roles, Authorities and Accountabilities 16

8.0 SAFETY PERFORMANCE TARGETS 17

9.0 OTHER CONSIDERATIONS 17

9.1 Environmental Assessment 17
9.2 Internal OPEX 18
9.3 External OPEX 18
9.4 Previous work and alternate solutions 19

10.0 REFERENCE LIST 20

11.0 GLOSSARY OF ACRONYMS 20

Revision Summary

Revision Number	Date	Comments
R000	2010-08-18	

R001	2011-02-25	Section 1: Removed reference to potential future D_2O storage needs Section 1.1, 2.1, 4.1: Revised AFS date from July 2015 to April 2015 as per PIMS milestone: All Refurb Related CP Projects Finished by Apr 15 2015 (RO-6 months). Section 1.3: Long Term Decommissioning – D_2O Storage removed Section 2.3: Long Term Decommissioning – D_2O Storage removed Section 3.3: Long Term Decommissioning – D_2O Storage removed Section 4.2: Long Term Decommissioning – D_2O Storage removed Section 5.0 Funding/Cost: Adjusted costs to reflect actual LTD costs and new timeline. Section 5.1 Refurbishment D_2O Storage: Removed section, cost is now included in Section 5.0 Section 5.2 Operational Improvement – D2O Storage and Drum Handling: Removed section, cost is now included in Section 5.0 Section 5.3 Long Term Decommissioning – D_2O Storage removed Section 7.1 Added Terry Karaim as the Design Authority Section 7.1 Added Vince Tzambazis as Project Manager Section 7.1 Added Raza Zaidi as Manager, Design Engineering Nuclear Refurbishment Section 9.4 Removed reference to long term planning for PN decommissioning

1.0 NEEDS STATEMENT (BACKGROUND)

This charter initiates the project to build a Heavy Water Storage Facility at the Darlington site to combine expected D_2O storage needs for DN Refurbishment, TRF and DN Operational Improvement (Ref [1]). Reviews of the needs and evaluation of the options for both refurbishment storage (Ref. [2]) and operational improvement (Ref. [3] and [11]) have been completed. Although this charter summarizes details from those reports, review of these reports is required prior to finalization of either technical specifications or the scope of work.

1.1 Refurbishment - D_2O Storage

The major driver to add storage capacity in the short term is the refurbishment (Retube and Feeder Replacement) of DN units before their predicted end of service life. The start of the refurbishment outages is planned for October 2016 but may occur as early as October 2015. The New D_2O Storage Facility at Darlington, as a Campus Plan Project, must be completed and fully functional six months before the earliest start of refurbishment (i.e. by April 2015). The additional facility has to provide sufficient heavy water storage capacity at the Darlington site during simultaneous overhaul of two reactors. This implies two units of heavy water fully drained from the HTS, Moderator System, and additional space for downgraded D_2O generated during decontamination activities. The facility will operate during and after refurbishment.

1.2 TRF and DN Operational Improvements D_2O Storage & Drum Handling Facilities

The secondary driver is a consequence of a previously initiated Operational Improvement project, 16-31555, subsequently deferred to be merged with the refurbishment project in order to reduce OPG costs (the cost reduction is estimated between 10% to 15% i.e. $20M to $30M (Ref. [2] and Section 5.0 of this document)). This storage is required to improve utilization of the Darlington TRF and mitigate threats to the achievement of OPG detritiation objectives (during and after refurbishment) due to constraints. There is a high strategic value in maintaining a standby low-Curie inventory to support in-service units or meet new future needs. The addition of this storage will delay a decision on how best to meet future needs for detritiation capacity to beyond 2020, and could potentially eliminate the need for a major refurbishment of the existing TRF or consideration of a new plant. These requirements are identified in a revised charter for Operational Improvements (Ref [3]), and shall be consulted for full details. A summary of the requirements are presented here:

1.2.1 TRF and DN Operational Improvements D_2O Storage:

A number of deficiencies in OPG's tritium removal process constrain OPG from maximizing TRF utilization and minimizing airborne and waterborne tritium emissions.

- There is a disconnect between TRF availability and tritium removal demand due to insufficient feed and product storage capacity at the TRF, resulting in decreased tritium removal efficiency
- The TRF is extremely complex in design, has numerous single point equipment vulnerabilities, and an operating cycle which requires lengthy maintenance outages, resulting in inconsistent availability. TRF unavailability would be mitigated by additional feed and product storage capacity
- Weekly Bruce Power and PN D_2O shipments to/from the TRF are currently limited in volume and are only scheduled when the TRF is in service. Additional storage capacity would allow more flexible D_2O shipment scheduling.

A shortage of D_2O storage space at DN constrains operations' ability to address competing demands for D_2O inventory and storage for outages and process needs.

- Reactor grade D_2O storage problems become particularly acute when there is a 4 unit outage, a moderator drain, or an unplanned extended TRF outage.
- Current storage capacity does not provide adequate flexibility to segregate different streams or grades of high isotopic D_2O for processing. This is being resolved by off-site storage use, but this increases cost and creates extra work to handle and move inventories.
- The lack of sufficient storage for downgraded D_2O creates problems whenever there is a need to clean-up and upgrade D_2O contaminated with total organic compounds, or if there is a need for an extended SUP outage.

The required storage capacity for refurbishment shall be operational after the refurbishment to support station outages and the overall future D_2O management strategy.

1.2.2 Increased drum handling capability:

A large number of drums have been accumulated at both PN and DN, mainly because there are no facilities to handle (loading and unloading properly) clean and test the emptied drums before disposal or re-use. A drum must pass a required test before it can be reused for D_2O shipment. This uses valuable station space, creates stress on operations and increases safety and spill hazards. It also constrains OPG's ability to pursue other commercial opportunities such as sale of heavy water and detritiation services to third parties (the external revenue is estimated as being $ 9 million/year (Ref [11])).

1.2.3 Office space:

The current temporary state of TRF offices requires permanent replacements:

- Temporary trailers adjacent to the HWMB are used for TRF outage and internal work control meetings, roll-outs, field offices, permit preparation, etc. These

trailers will be replaced by temporary code-compliant trailers as part of DN's Fire safety reviews to meet CSA N293-07 by the end of 2010, and need to be ultimately replaced by permanent offices per the station long term plan to eliminate temporary trailers.

- Current non-standard locations (e.g. transformer room, waste-handling areas, laundry room etc) for offices require permanent office space replacements

2.0 PROJECT OBJECTIVES (CRITICAL SUCCESS FACTORS)

The project must integrate current heavy water storage needs to maximize economies of scale in construction and in logistics for future operation and maintenance. Specific success factors for each of the contributing needs are as follows:

2.1 Refurbishment - D_2O Storage

- The project must be completed within the approved schedule and funding envelopes while meeting corporate safety, quality, sustainable energy and environmental targets, and the facility must be fully operational six months before the earliest potential start of refurbishment (i.e. AFS by April 2015)
- The new Heavy Water Storage Facility at DN must have a storage capability of 1700 m^3. This storage is for two units Moderator drain (700 m^3), HTS drain including auxiliaries (800 m^3), and downgraded D_2O generated during HTS Decontamination (200 m^3)
- All pressure boundary systems and components shall meet the requirement of CSA-N285.0-08
- The facility needs to meet the requirement of a Zone 3 area (contains systems and equipment that may be sources of radiation or contamination)
- The facility shall meet the requirements of National Building Code of Canada 2005, the National Fire Code of Canada 2005, CSA-N293-07 (Fire Protection for CANDU Nuclear Power Plants), as well as all federal, provincial and local municipal regulations
- The need for seismic qualification shall be considered in the design.
- Connections to the existing HWMB piping shall be provided
- The construction of the facility must not disrupt required functions of the present operation while the facility is being built, and the outcome of this project shall not have any negative impact on the performance of the existing systems
- There shall be a capability for drum handling to support miscellaneous heavy water handling such as system draining and drying activities during refurbishment.

2.2 Operational Improvement - D_2O Storage & Drum Handling

Provide storage, drum handling facilities and office space as described in Ref [3], and summarized here:

2.2.1 TRF and Operational Improvements D_2O Storage

Provide sufficient D_2O storage capacity at Darlington to:

- Improve tritium removal capability within OPG by providing scheduling flexibility and removing detritiation management dependency on TRF availability.
- Improve utilization efficiency of available TRF capacity by providing higher Curie input feed, thereby maximizing tritium removal.
- Improve operational flexibility and ability to segregate different D_2O streams to support DN operation and outage scenarios, such as unit, station containment and vacuum building outages (SCO, VBO).

These requirements are expected to be met by providing 400 m^3 of reactor grade D_2O storage, in addition to usage of 200 m^3 of refurbishment D_2O storage for handling downgraded D_2O both post-refurbishment and during refurbishment when it is not needed to support decontamination activities.

2.2.2 Drum Handling, Cleaning, and Testing Facility

Incorporate a Drum Handling, Cleaning, and Testing facility to service both PN and DN needs including long term cleaning and disposal of current inventory of approximately 3500 drums and eliminate a safety hazard. A drum facility will also provide the ability to support refurbishment activities (e.g. miscellaneous heavy water handling activities such as system draining and drying etc.), expedite commercial shipments, reduce station effort, improve operational safety and allow OPG to enhance its net income by up to $4M/yr (Ref [11]).

2.2.3 Office Space

- Ensure new office and meeting space is sufficient for current and future needs for efficient TRF operation and maintenance.
- Ensure that no disruption occurs in TRF operation as a result of office construction or renovation.

3.0 PROJECT SCOPE

Note: the total storage volume in the three sections below adds to 2100 m^3. It has been identified separately in each section to make the assessment of alternatives easier for the Business Case Development phase of the project.

3.1 Refurbishment - D_2O Storage

Build a D_2O Storage Facility at DN with a capacity of 1700 m^3 for refurbishment needs and located west of the HWMB and with piping interconnection to that facility.

The salient requirements for the facility include the following:

- Most of the D_2O lines and storage tanks are expected to contain more than 74 GBq/kg (2 Ci/kg) tritium, hence all nuclear systems are classified as Class 3. Only the conventional part of the system is classified as Class 6
- The tanks should be sized to provide segregation of different streams of D_2O which shall be accurately defined during the design phase of the project (e.g. Low Curie, High Curie, reactor grade, downgraded, High TOC etc.)
- Tanks with associated pump, piping, valves etc. will be located inside the new facility
- Means of sampling and analyzing of the contents in the tanks shall be provided
- The storage facility shall have a heating and ventilation system to maintain minimum OH&SA ambient conditions during winter months with building sealing/insulating to minimize heat losses
- The materials required to complete the project shall be procured as per OPG specifications/standards
- An air ventilation and drying system capable of minimizing tritium emissions from facility operations (e.g. tank venting).
- The containment function of the storage facility shall be seismically qualified per DG-38-03650-2B and Ref [6].

It is recommended that the design of the facility should be similar to the existing D_2O Supply and Inventory system in order to take advantage of the previous design work (Ref [7]). This includes the use of an underground seismically qualified dike as the preferred option as well as a D_2O liquid recovery system to handle equipment leakage. A seismic dike is recommended as it avoids the cost and design complexity of seismic supports, double wall piping and valves that would be required for a double walled tanks concept.

For consistency most of the tanks should be the same size as the ones used in the existing D_2O storage (Ref [7] and [8]). Some of them should be divided in two or four (or four smaller tanks should be used) in order to give further operational flexibility in the storage, handling and transferring of different grades of heavy water to and from reactor units, TRF, Upgrader, etc. (Ref [3]).

The equipment that needs to be housed within this facility is as follows:

- All tanks shall be inter-connected with piping with provision for isolation, transfer and purification of the content. Piping shall include tank inlet and outlet headers, tank vent and drain lines and provision for tank recirculation
- Level and pressure indications shall be provided for the new D_2O storage tanks, both locally and in the existing HWMB Control Room. Alarms (locally and Control Room) shall be provided to alert operator of abnormality in the storage tanks. The existing control computers in the HWMB and TRF Building were designed with, and have spare capacity, hence shall be utilized for any new equipment indicating

alarms and control functions

- The new storage system shall have its own pumps for transfer of the heavy water between the facility and the stations
- Tanks to be protected against overpressure by a pressure relief valve in the vent line
- Isolations and draining shall be provided to isolate/drain any individual tank for maintenance.
- Double block and bleed arrangements shall be used for isolation between tanks designated for HTS D_2O and Moderator D_2O, and interconnecting lines between reactor grade and downgraded D_2O
- Tritium monitoring, tritium emission reduction and D_2O recovery from vent lines shall be considered. Fixed Area Alarming Tritium monitors shall be installed to detect the presence of tritiated water and/or vapor leakages

The services required for this facility are as follow:

- Class IV and Class II power supply. The design process shall consider whether Class III power supply is necessary.
- Voice, data and public address system tie-ins to the station
- Sewage connections and domestic water supply
- The facility's ventilation should ensure that the area is kept under marginal negative pressure to maximize the recovery of D_2O and isotope products and to minimize release to the environment; it should include radiation monitoring with alarm and exhaust through HEPA filters
- Sufficient heat to prevent freezing of D_2O in a four unit shutdown
- Dry air cover gas of 'instrument air' quality with feed/bleed control system

The following are other considerations that need to be included in this project:

- Relocation of existing services and facilities, buried underground and above ground services, if required
- Relocation of personnel, where necessary, to accommodate construction
- Consideration shall be given, at the design stage, to provide access and accommodations for future maintenance and inspection of the equipment (e.g. platforms at top of tanks)
- Provision for hoisting shall be made where required (e.g. hoisting beam, hatch, elevator etc.)

The following are project and documentation requirements that must be accounted for in this project:

- All necessary supporting documentation for funding approvals
- Environmental Assessment, if required, which would include but not limited to the following:

- Air and Water Emission assessments and support
- Environmental, Spill and Waste Management Plans
- ALARA Assessments and Support
- Screening Environmental Assessment Report
- TSSA registration & approval
- Preliminary Nuclear Safety Assessment for changes to D_2O Storage amounts and potential releases (this need will be included in the next Site License or covered by CNSC approval, and will be finalized in BCS or design phases)

- Specifications and drawings with complete details for mechanical, electrical, instrumentation and civil equipment and components (to OPG's "PassPort" standards)
- Equipment labeling to OPG standards
- Service systems commissioning records
- Identification of a recommended set of spare parts and long lead items
- Operating and Maintenance manuals for the instrumentation and monitoring technology
- Training manual and delivery of training needed for the instrumentation and monitoring technologies

3.2 TRF and DN Operational Improvements D_2O Storage & Drum Handling Facilities

3.2.1 TRF and Operational Improvements D_2O Storage

Adding 400 m^3 of storage at Darlington connected to the HWMB as follows:

- 200 m^3 tanks for high Ci D_2O for Moderator operations support / TRF feed / SUP product
- 200 m^3 tanks for low Ci D_2O for PHT operations support / TRF product

Note: Additional 200 m^3 storage (for a total of 600) will be required to support the Operational Improvement. However this storage space is considered as dual purpose and is included in the Refurbishment scope of 1700 m^3. (The volume set aside for decontamination purposes has been assessed to be sufficiently available for both purposes).. This 200 m^3 is planned to be used for the downgraded D_2O storage, and is to be distributed as follows (Ref [3]):

- 100 m^3 for downgraded dirty D_2O storage, split into 2 x 25 m^3 and 1 x 50 m^3 tanks
- 100 m^3 for downgraded clean D_2O storage, split into 2 x 25 m^3 and 1 x 50 m^3 tanks
- D_2O transfer system piping is to be reconfigured to allow use of either ion-exchange column as the lead unit for D_2O clean-up (SCI 38410) of the dirty tanks

During the refurbishment the downgraded D_2O storage used for decontamination is expected to be periodically available to station operations.

3.2.2 Drum Handling, Cleaning, and Testing Facility

This facility needs to accommodate:

- Loading / unloading of drums
- Storage space for approximately 300 drums
- Drum cleaning and pressure testing

3.2.3 Office Space

In order to best support the extended life of the refurbished DN:

- Assess current temporary and non-standard office use and location
- Assess recommendations from developmental work on Project 16-31555
- Construct permanent office and meeting space where necessary to address temporary or non-office accommodation.

4.0 PRIORITY/TIMING

4.1 Refurbishment & Operational Improvement - D_2O Storage & Drum Handling

This project is expected to be initiated no later than 2011 (Year 1) and estimated to be fully installed and commissioned by the end of Q1, 2015 (Year 4), before the start of refurbishment. The details for each activity can be found from the following schedule:

The milestone dates to meet the April 2015 AFS date, are as follows:

- Start: 2010
- AFS: April 2015
- Closeout: Oct 2015

It is understood that the timeline prescribed in this Charter is preliminary and may need to be adjusted in the future as more details of the project are available. The overall schedule for execution of the project includes time for approvals from municipality and CNSC. The priority and timing for this project is dictated by the following factors:

- The Refurbishment starting date
- Ability of Darlington units to continuously operate within the prescribed Administrative and OP&P limits
- Ability at each site to segregate various D_2O streams for processing and to support continuous operation
- Early completion in Q1/2015 in time for the Station SCO would eliminate many of the operational challenges outlined in the Operational Improvement Charter (Ref [3])

- At the time of producing this charter OPG is planning to proceed with the installation under the current license (i.e. without waiting for an EA), and has requested CNSC's concurrence. If inclusion in the Darlington refurbishment EA is necessary (projected to be approved in Q1/2013) then construction cannot be started before approval of the EA
- Consideration of the construction season, especially if relocation is needed for the existing underground services such as the H_2 line

5.0 FUNDING/COST

Since parts of a combined project were previously identified separately as either refurbishment or sustaining capital, a final decision on funding source is required (e.g. dual stream or just refurbishment) from Refurbishment and Corporate Finance. In the interim, developmental funding will be available from Nuclear Refurbishment.

The estimated costs of the project given here represents a sum of the estimated costs from the draft BCS of the 16-3555 (Ref [11]) and the Darlington Refurbishment D2O Storage Evaluation (Ref [2]). A combined implementation of the two projects (Refurbishment and Operational Improvements) is expected to save an average of 10% to 15% ($20M to $30M) versus the independent execution. With this saving, the estimated total cost is $208 million with a proposed cash flow as follows:

Cost [k$]	LTD	2011	2012	2013	2014	2015	2016	Total
No Contingency	1964	600	27500	41100	47800	39700	5100	163700
Including Contingency	1964	800	34900	52300	62700	50800	4300	207800

Note: LTD costs were incurred before Feb. 18, 2011

This table of cost of the combined project supersedes previous estimates. Note that the scope of the previous project, 16-31555, will now be considered part of the scope of the larger combined project and, if approved, will be funded by Nuclear Refurbishment going forward. The larger combined project includes the following:

1. **Refurbishment – D_2O Storage**, which includes a building that can house a total capacity of 1700 m^3. For further details see Ref [2].
2. **Operational Improvement – D2O Storage and Drum Handling,** which was previously classified as Sustaining Capital in the preceding Project 16-3555 and includes an additional 400 m^3 storage.

6.0 RESOURCING

Refurbishment Engineering Support is responsible for preparing the project charter.

Project Sponsors: Dietmar Reiner - Vice President, Nuclear Refurbishment
Stu Seedhouse - Senior Vice President, Darlington

Project co-owners: Director, Operations and Maintenance Darlington
Director, Operations and Maintenance Refurbishment

The Execution division of Nuclear Refurbishment will be responsible for the execution of the project.

Other Support: DN Operations; Project Design and Design Support, Nuclear Refurbishment Engineering Support, ISG, Corporate and Investment Planning, Nuclear Supply Chain, PN Common Services, Nuclear Programs HW Programming

Other accountabilities are as listed in Section 7.1.

The design and construction is expected to be outsourced.

Procurement is expected to be done by OPG.

7.0 AUTHORITIES AND ACCOUNTABILITIES

7.1 Current Roles, Authorities and Accountabilities

Authorities and accountabilities are listed in the following table:

Role	Individual	Authorities and accountabilities
Director, Engineering Nuclear Refurbishment	Terry Karaim	Approves the charter. Has authority to approve scope, cost and schedule at this stage of the project.
Vice President Execution Nuclear Refurbishment	Mark Arnone	Accountable to manage project execution in Nuclear Refurbishment and allocate management resources to support this project.
Project Manager	Vince Tzambazis	Accountable to stake holders and VP - Execution for project execution within the boundaries set by this charter and per approved budget/schedule. Has authority to change the project baseline and allocate management reserve within authorized scope, cost and end date. Accountable for preparation of the Business Case Summary (BCS) and Project Execution Plan (PEP).
Manager, Design Engineering Nuclear Refurbishment	Raza Zaidi	Accountable for providing Design Resources as required and to the Design Authority for the issue of Design Packages.
Design Authority	Terry Karaim	Accountable to Site VP's and Projects for the approval of Design packages.

8.0 SAFETY PERFORMANCE TARGETS

It is understood that the performance target is very preliminary, and will be adjusted as the scope is further defined in the future.

Fatalities:	0
Permanent disabilities:	0
Lost time accident with full recovery:	0
Minor injuries with no time lost:	0
No. of near misses with high MRPH:	0
No. of near misses with low MRPH:	0
Injuries to the public:	0
Accident severity rate (days/200K wkhrs)	0
Safety meetings held per year	4
% Attendance rate at safety meetings	90
Total dose	0

9.0 OTHER CONSIDERATIONS

9.1 Environmental Assessment

The projected facility location is inside security fence and is considered radiological Unzoned Area. Most of the zone inside the facility after commissioning and start-up will be Zone 3.

An EA study is not considered required at the time of producing this charter. As of today there are no expected environmental effects from this project during construction. If the project must be included in Darlington refurbishment EA project description, then construction must follow EA approval in Q1 2013 at the earliest. This is considered as a risk to the schedule.

There is no jurisdictional requirement for DN to obtain building permits. Provincial planning and/or building laws do not apply to OPG nuclear facilities. Nevertheless, in the past OPG has chosen to provide municipal funding for projects outside the station protected area, and extending to related construction project activities inside the station. It is beneficial for OPG to extend this as a public relations measure to the community; however, it is important to remember there is no jurisdictional power held by the municipality which could directly affect matters which are essential to the operation of DN.

Consistent with Pickering and Bruce Sites and in consideration of the CNSC role in regulating facilities within the protected area, building permit and development charges requirements for the building within the Nuclear "Protected Area" do not apply.

The Ref [4] and Ref [5] instructions reference building permit requirements for facilities outside the Protected Area.

9.2 Internal OPEX

Front end planning is essential to ensure that project scope, schedule and cost is efficiently managed throughout the project. The front end planning should start in Q3/2010. Some of the lessons learned from previous projects for improvement considerations are:

- utilize Team members from the previous project where practical, and minimize the number of changes to the project team
- ensure that the Engineering, Procurement and Construction strategy is well defined and does not change, prior to project start
- site excavation activities typically result in discovery issues so this needs to be addressed as part of contingency planning; in addition, EA considerations and nuclear safety analysis may be involved since adding Pickering safe storage water will increase the inventory of curies at site
- DN Operations support and review is critical during the development of the design, to ensure that post-refurbishment needs are being appropriately addressed
- Nuclear Supply Chain must be involved very early in the front end planning to determine procurement strategy for Services and Materials

9.3 External OPEX

The following OPEX is identified for consideration, as part of the front end planning:

- Bruce Power had installed additional D_2O storage tanks in their Ancillary Services Building. Although the tanks were installed and are in use, the project was only partially completed. This project experienced numerous problems, which resulted in schedule delays and cost increases (Ref [3])
- OPEX from Pickering safe storage and EA
- consideration must also be given to external OPEX from other CANDU facilities performing refurbishment activities, requiring adjustment of their HWM storage needs

9.4 Previous work and alternate solutions

A significant amount of the work already completed for Project 16-31555 will still be applicable to this project, especially if the site location remains the same. Every effort must be made to incorporate as much of this work into the new project as possible.

The alternate solution of double wall tanks (versus dike) could be explored further for cost effectiveness.

10.0 REFERENCE LIST

[1] N-CORR-09701-0331550..... Recommended Bounding D_2O Storage Capacity at Darlington Site for Planning purposes

[2] NK38-REP-09701-0265054..... Darlington Refurb D_2O Storage Facility Evaluation

[3] N-PCH-03800-10000 Adding Heavy Water Storage/Drum Handling Facility

[4] N-INS-00700-10004.....Facilities Commercial Modification Control

[5] N-INS-29000-10000..... Temporary Facilities

[6] NK38-REP-D1274014 ..... Darlington GS A Heavy Water Management Building Seismic Analysis

[7] NK38-DM-38110.....D_2O SUPPLY - Design Manual

[8] NK38-SR-03500-10001 ...Darlington Safety Report - Part 1: Plant/site Description And Part 2: Design Description

[9] NK38-PLAN-09701-0254873...DNGS Refurbishment Project Proposed Screening Level Construction Island Site Plan

[10] NK38-REP-10140-10008....Darlington Nuclear Groundwater Monitoring Program: 2008

[11] D-BCS-38000-10001 .....DNGS D_2O Storage and Drum Handling Facility (Project #31555) - Developmental BCS

11.0 GLOSSARY OF ACRONYMS

AFS	Available For Service
CNSC	Canadian Nuclear Safety Commission
DLEP	Darlington Life Extension Project
DN	Darlington Nuclear
EA	Environmental Assessment
ECC	Engineering Change Control
FSOS	Field Shift Operating Supervisor
HTS	Heat Transport System
HW	Heavy Water
HWMB	Heavy Water Management Building

HWSF	Heavy Water Storage Facility
IXCU	Ion Exchange Column Unit
LLDS	Low Level Drained State
LTD	Life To Date
NBC	National Building Code
NGS	Nuclear Generating Station
NPV	Net Present Value
OPEX	Operating Experience
OPG	Ontario Power Generation
PB	Pickering B
PN	Pickering Nuclear
S&I	Storage & Inventory
SCO	Station Containment Outage
SNO	Supervising Nuclear Operator
SUP	Station Upgrading Plant
TOC	Total Organic Content
TRF	Tritium Removal Facility

THIS PAGE INTENTIONALLY BLANK

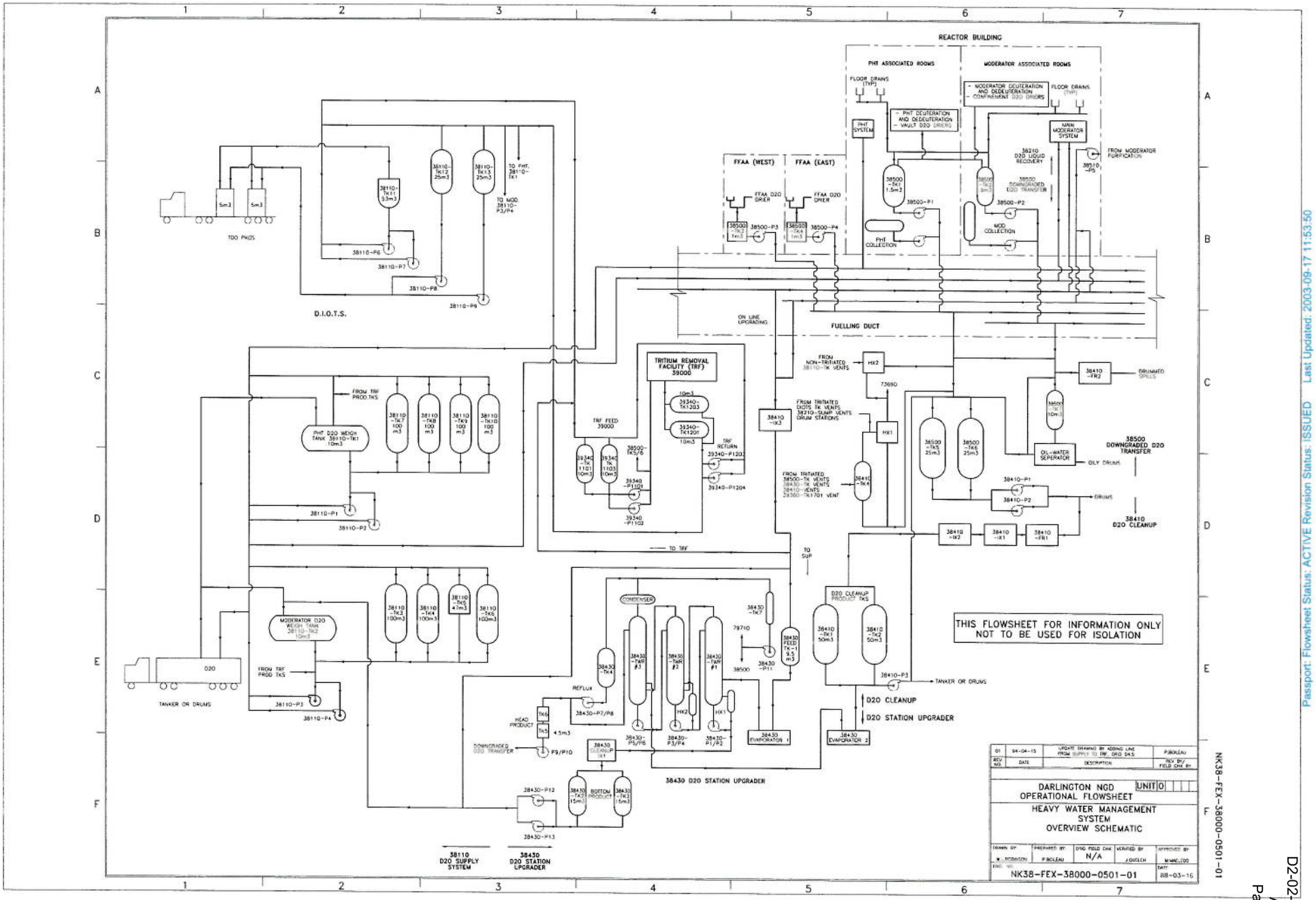

Filed: 2021-04-19
EB-2020-0290
Exhibit L
D2-02-AMPCO-097
Attachment 2
Page 71 of 106

Passport: Flowsheet Status: ACTIVE Revision Status: ISSUED Last Updated: 2003-09-17 11:53:50

THIS PAGE INTENTIONALLY BLANK

PEOPLE POWERING THE FUTURE

Darlington D2O Storage Facility 16-31555

Value Engineering Workshop
April 12-15, 2011

ONTARIO POWER GENERATION

PEOPLE POWERING THE FUTURE

Agenda

- Introduction of project team and stake holders
- Why Value Engineering?
- Review project's objectives and deliverables
- Review project's current status
- Current Alternatives
- Questions

ONTARIO POWER GENERATION

PEOPLE POWERING THE FUTURE

Value Engineering Team

Core VE Team Members		Drop In VE Team Members	
Projects	Julian Read	Campus Plan	Nicolle Butcher
Projects	Peter Moore	Performance Engineering	Peggy Ancker
Projects	John O'Neill	Station Operations	Bill Jeffers
Governance and Improvement	Macy Jafarzadeh	Environment	Ian Hartford
Refurbishment Design	Mike Ferrarelli	Environment	Soo Chae
TRF Technical	Thomas Wong	Projects	Vince Tzambazis
TRF Technical	Curt Noel	Projects	George Makdessi
TRF Operations	Craig Hotrum	Refurbishment Design	Ihab Yacoub
TRF Life Cycle	Denny Williams	HW/TRF Production	Perry Forbeck
Environment	Susan Bragg	Station Operations	Martin Janes
Performance Engineering	Jeff Stewart/Shirley Leung	CMO	Al Farmiloe
CMO	Eric Duncan	CMO	Susan Luxton
Unit 0 Station Operations	Kevin Simmons	Refurbishment Operations	George Boyd/Ron Chatterton

ONTARIO POWER GENERATION

PEOPLE POWERING THE FUTURE

Why Value Engineering?

- Intensive workshop to identify ways to improve the value of the project
  - *Systematic and function-based approach to improving the value*
  - *Make sure right project is being done*
- Originally created by GE during WWII
  - *There were shortages of skilled labour, raw materials, and component parts*
  - *Necessity drove need to look for acceptable substitutes*
  - *GE noticed that these substitutions often reduced costs, improved the product, or both*
  - *This turned into a systematic process, also known as Value Analysis*

ONTARIO POWER GENERATION

PEOPLE POWERING THE FUTURE

Overall Project Objectives

- To build a 2,100 m^3 capacity Heavy Water Storage Facility at the Darlington site to combine expected D_2O storage needs for DN Refurbishment, TRF and DN Operational Improvement.
- The new Facility must be completed and fully functional six months before the earliest start of refurbishment (by April 2015 – 4 years from now)

ONTARIO POWER GENERATION

PEOPLE POWERING THE FUTURE

High-Level Requirements

1. Refurbishment Needs
   - *Provide D2O storage for simultaneous overhaul of two reactors*
     - *Two units moderator drains (700m^3)*
     - *Two PHT drain including auxiliaries (800m^3)*
     - *Downgraded D2O generated during PHT decontamination (200m^3) to be shared with TRF operational improvements*

ONTARIO POWER GENERATION

High-Level Requirements

2. TRF Operational Improvement

Provide sufficient D_2O storage capacity at Darlington to.

- *Improve utilization of available TRF capacity by providing scheduling flexibility to allow shipments of D2O to and from Darlington regardless of TRF operability*
  - *TRF can not currently stockpile sufficient quantities of tritiated D2O feed during TRF outages to ensure continuous operation when available*
  - *TRF can not currently produce a supply of de-tritiated D2O for future sales during outages*
- *Improve operational flexibility and ability to segregate different D_2O streams to support DN operation and outage scenarios, such as unit, station containment and vacuum building outages (SCO, VBO).*
- *These requirements are expected to be met by providing*
  - *400 m^3 of reactor grade D_2O storage*
  - *200 m^3 of shared D_2O storage with refurbishment for handling downgraded D_2O*

High-Level Requirements

3. Drum Handling, Cleaning, Testing Facility

- *Incorporate a Drum Handling, Cleaning, and Testing facility to service both PN and DN needs*
- *Include long term cleaning and disposal of current inventory of approximately 3,500 drums*
- *This facility will need space to store 300 drums of approx 200-L capacity*

4. Office Space

- *Ensure new office and meeting space is sufficient for current and future needs for efficient TRF operation and maintenance.*

Charter Requirements

Page 10 to 13 list Project Scope

The salient requirements for the facility include the following:

- Most of the D_2O lines and storage tanks are expected to contain more than 74 GBq/kg (2 Ci/kg) tritium, hence all nuclear systems are classified as Class 3. Only the conventional part of the system is classified as Class 6
- The tanks should be sized to provide segregation of different streams of D_2O which shall be accurately defined during the design phase of the project (e.g. Low Curie, High Curie, reactor grade, downgraded, High TOC etc.)
- Tanks with associated pump, piping, valves etc. will be located inside the new facility
- Means of sampling and analyzing of the contents in the tanks shall be provided
- The storage facility shall have a heating and ventilation system to maintain minimum OH&SA ambient conditions during winter months with building sealing/insulating to minimize heat losses
- The materials required to complete the project shall be procured as per OPG specifications/standards
- An air ventilation and drying system capable of minimizing tritium emissions from facility operations (e.g. tank venting)
- The containment function of the storage facility shall be seismically qualified per DD-38-03650-28 and Ref [9]

Project status

- Scope of Work and Contract Terms & Conditions are being drafted
  - *The Value Engineering Report generated by this workshop will be sent to the design agency proponents*
  - *Functional needs will form a basis for this project*
- *What's next?*
  - *Finalize Proponents list*
  - *Issue Engineering RFP on May 6, 2011*
  - *Preliminary Engineering starting in the Fall of this year*

Overall Project Schedule

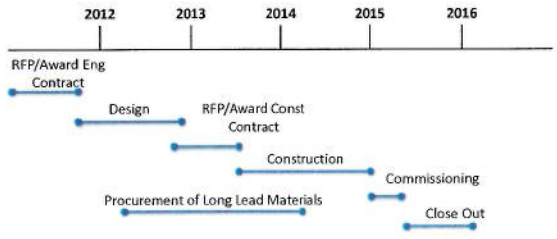

Alternatives

- Current Alternatives for discussion
  1. *One facility at one of the proposed locations inside the fence*
  2. *One facility outside of the fence*
  3. *A hybrid solution*
     - *Build TRF scope adjacent to existing HWMB*
     - *Build Refurbishment scope elsewhere*

Proposed Locations

Proposed Locations (cont'd)

Questions?

No Value Engineering Done???

Hopefully each house comes with a 4WD vehicle…

THIS PAGE INTENTIONALLY BLANK

APPENDIX D
COST ESTIMATE/ANALYSIS

NCE

2800 Fourteenth Avenue, Suite 406
Markham, Ontario L3R 0E4
Telephone 905.943.4443
Toll Free 866.NCE.VALU
866.623.8258
Fax 905.943.4449
www.nceve.com

MEMORANDUM

To	File	From	David Wilson
Company		Date	May 2, 2011
Project No.	2011-005	Your File No.	
Project	DNGS D_2O Storage Facility VE Study		
Subject	Cost Information		

The value engineering study of the above noted project was conducted early in the project development cycle. As such, detailed project or operational cost information was not available to the VE team.

For the purposes of the value engineering study, the VE team assumed that the project cost could be represented by the following parametric cost elements:

Building (14,000 Sq Ft)	$20M
Tanks	$100M
Offices	$5M
Drum Facility	$5M
Infrastructure	$5M
Equipment	$5M
Site Preparation	$10M
Other	$ 0M
Subtotal	**$150M**
Contingency	$50M
Project Total	**$200M**

/D

THIS PAGE INTENTIONALLY BLANK

APPENDIX E

FUNCTION GENERATION/DETERMINATION

NCE

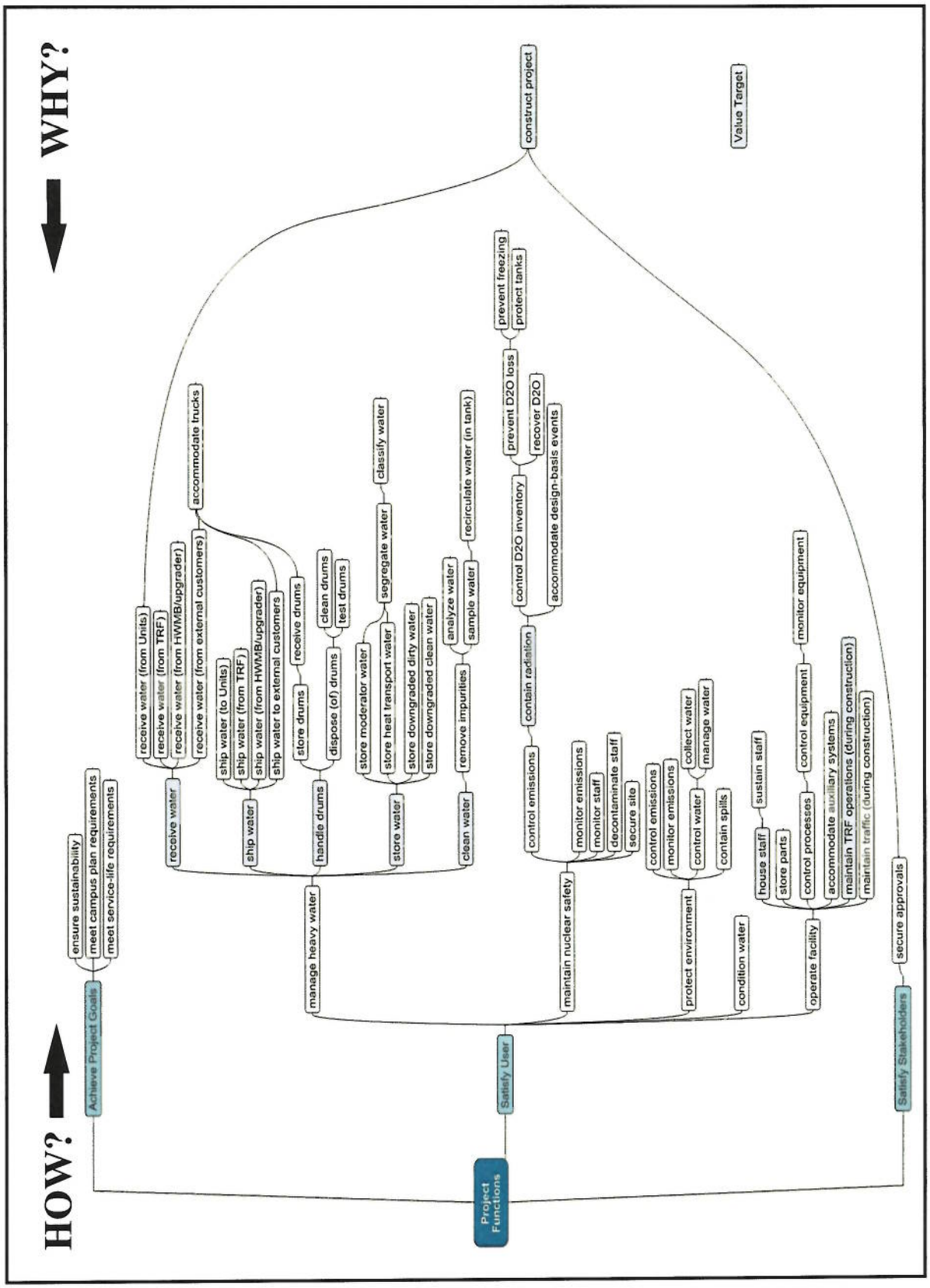

NCE

FAST Diagram

Exhibit E.1

THIS PAGE INTENTIONALLY BLANK

Value Management

Project:	DNGS D_2O Storage Facility	Date:	April 2011
Function Analysis		Sheet:	1 of 3

Project Component	Function		Classification					
	Active Verb	Measurable Noun	Goal	H/O	Basic	Supp.	Sec.	L/O
	Ensure	Sustainability	✓					
	Meet	Campus Plan Requirements	✓					
	Meet	Service-Life Requirements	✓					
	Satisfy	User		✓				
	Manage	Heavy Water			✓			
	Receive	Water (From Units)					✓	
	Receive	Water (From TRF)					✓	
	Receive	Water (From HWMB/Upgrader)					✓	
	Receive	Water (From External Customers)					✓	
	Accommodate	Trucks					✓	
	Ship	Water					✓	
	Ship	Water (To Units)					✓	
	Ship	Water (From TRF)					✓	
	Ship	Water (From HWMB/Upgrader)					✓	
	Ship	Water To External Customers					✓	
	Handle	Drums					✓	
	Store	Drums					✓	
	Receive	Drums					✓	
	Dispose (Of)	Drums					✓	
	Clean	Drums					✓	
	Test	Drums					✓	
	Store	Water					✓	
	Store	Moderator Water					✓	
	Store	Heat Transport Water					✓	
	Segregate	Water					✓	

Value Management

Project:	DNGS D_2O Storage Facility	Date:	April 2011
Function Analysis		Sheet:	2 of 3

Project Component	Function		Classification					
	Active Verb	Measurable Noun	Goal	H/O	Basic	Supp.	Sec.	L/O
	Classify	Water					✓	
	Store	Downgraded Dirty Water					✓	
	Store	Downgraded Clean Water					✓	
	Clean	Water					✓	
	Remove	Impurities					✓	
	Analyze	Water					✓	
	Sample	Water					✓	
	Recirculate	Water (In Tank)					✓	
	Maintain	Nuclear Safety			✓			
	Control	Emissions					✓	
	Contain	Radiation					✓	
	Control	D_2O Inventory					✓	
	Prevent	D_2O Loss					✓	
	Prevent	Freezing					✓	
	Protect	Tanks					✓	
	Construct	Project						✓
	Recover	D_2O					✓	
	Accommodate	Design-Basis Events					✓	
	Monitor	Emissions					✓	
	Monitor	Staff					✓	
	Decontaminate	Staff					✓	
	Secure	Site					✓	
	Protect	Environment			✓			
	Control	Emissions					✓	
	Monitor	Emissions					✓	
	Control	Water					✓	
	Collect	Water					✓	
	Manage	Water					✓	
	Contain	Spills					✓	

Value Management

Project:	DNGS D_2O Storage Facility	Date:	April 2011
Function Analysis		Sheet:	3 of 3

Project Component	Function		Classification					
	Active Verb	Measurable Noun	Goal	H/O	Basic	Supp.	Sec.	L/O
	Condition	Water			✓			
	Operate	Facility			✓			
	House	Staff					✓	
	Sustain	Staff					✓	
	Store	Parts					✓	
	Control	Processes					✓	
	Control	Equipment					✓	
	Monitor	Equipment					✓	
	Accommodate	Auxiliary Systems					✓	
	Maintain	TRF Operations (During Construction)					✓	
	Maintain	Traffic (During Construction)					✓	
	Satisfy	Stakeholders		✓				
	Secure	Approvals				✓		

THIS PAGE INTENTIONALLY BLANK

APPENDIX F
CREATIVE IDEA LISTING

NCE

Value Management

Project:	DNGS D_2O Storage Facility	Date:	April 2011
Idea Generation		Sheet:	1 of 7

No	Idea	Rating
CW	**Clean Water**	
CW-01	Commissioning existing oil/water separator	
CW-02	Second permanent cleaning system (fixed or skid-mounted)	
CW-03	Run multiple IX (existing) simultaneously with different feed	
CW-04	SARX for oil removal (currently used at PNGS)	
CW-05	Install online sampling/analyzing system or GRAB sample station	
CW-06	Tanks close to IX to improve efficiency of re-circulation (cleanup)	
CW-07	Tie-in to existing UVO Xidizer for cleanup independent of supply feed tanks	
CW-08	Facility for portable I/X column hookup for cleaning	
CW-09	Clean Refurb water in the unit prior to shipping to TRF	
CW-10	A number of smaller tanks for downgraded D_2O	
CW-11	Ability to clean 3,500 backlog of D_2O drums	
CW-12	Clean dirty water from external customers	
CW-13	Resin and charcoal disposal	
CW-14	De-deut tanks if new IXcu	
CP	**Construct Project**	
CP-01	Temporary barge for lay down area (in lake)	X
CP-02	Provide temporary washrooms during construction	
CP-03	Ensure design is constructible	
CP-04	Solar panels for CLII backup on roof	OS
CP-05	Railings on roof for roof access	
CP-06	Construct in 3 phases: 1st unit refurb, 2nd unit refurb and TRF/HWMB upgrade	
CP-07	Green roof	
CP-08	Proper radio communication infrastructure	
CP-09	Orientate equipment for ease of maintenance and operation	
CP-10	Storm water management (surface and roof drains)	
CP-11	Sediment and erosion control during construction	
CP-12	Outside company writes operation documentation	X
CP-13	TRF staff involved in "site technical assessment" by Design Agency	
CP-14	Consider quality of soils (rad – tritium and conv – hydrocarbon)	

Idea Rating Reference

5 – Great Opportunity
4 – Good Opportunity
3 – Some Opportunity
2 – Poor Value
1 – Unacceptable Impacts/Fatal Flaw
ID numbers show linked ideas
D/S – Design Suggestion
EC – Estimate Correction
PO – Project Opportunity
ABD – Already Being Done
OS – Out of Scope
X – Abandon

Value Management

Project:	DNGS D_2O Storage Facility	Date:	April 2011
Idea Generation		Sheet:	2 of 7

No	Idea	Rating
CP-15	TRF involved in design requirements decided by Design Agency (weekly meeting representative)	
CP-16	TRF staff involved in scope definition and preliminary engineering (in addition to COMS process) (weekly meeting representative)	
CP-17	Construct tanks outside, processing operations improvements inside fence	X
CP-18	Modular construction	
CP-19	Dedicated Traffic Officer	
CP-20	Site "A" logistics preferred	
CP-21	More risk to lake if construction is near lake	
CP-22	Sallyport scheduled entry/exit	
CP-23	Prefabricate most of equipment and piping away from plant	
CP-24	Build outside fence, move fence after construction	X
CP-25	Dezone area for construction	X
CP-26	Sallyport delays – second entry for construction	OS
CP-27	Need lay down area inside the fence as well	
CP-28	Helicopter material into protected area	X
CP-29	Coordinate with other campus plan projects	
CP-30	Refurb tanks at east location the rest at TRF	CP-06
CR	**Contain Radiation**	
CR-01	De-tritiate D_2O before storage to reduce exposure	
CR-02	Manual transfer in winter to prevent stagnant water in pipe	X
CR-03	Double wall tank	
CR-04	Control venting of cover gas to control airborne emissions	
CR-05	Shielding walls for drums and tanks limit exposure	
CR-06	Room tritium and gamma monitoring	
CR-07	Air clean up system to handle accidental tritium emissions into room	
CR-08	Seismic dike under building to contain and recover spill	
CR-09	Connect to the vacuum building for suction in accident	X
CR-10	Recovery drainage for spills/leaks	
CR-11	Second containment building for leaks and gas emissions	

Idea Rating Reference

5 – Great Opportunity
4 – Good Opportunity
3 – Some Opportunity
2 – Poor Value
1 – Unacceptable Impacts/Fatal Flaw
ID numbers show linked ideas
D/S – Design Suggestion
EC – Estimate Correction
PO – Project Opportunity
ABD – Already Being Done
OS - Out of Scope
X Abandon

Value Management

Project:	DNGS D_2O Storage Facility	Date:	April 2011
Idea Generation		Sheet:	3 of 7

No	Idea	Rating
CR-12	Dryer on stack for air emissions	
CR-13	Heat trace pipe to prevent D_2O freeze	
CR-14	Condense vapor out of cover gas	
CR-15	Best available technology/bench marking	
CR-16	Sealed sumps for spill	
CR-17	Use geothermal to maintain room/D_2O temperature	
CR-18	Have separate facility for irradiated D_2O	
CR-19	Connect stack monitor to main control computers	
CR-20	Use ALARA principles	
HD	**Handle Drums**	
HD-01	Send/hire Bruce to handle drums	X
HD-02	Recycle Useless drums	
HD-03	Combine chemical waste handling/processing station needs with D_2O	
HD-04	AECL hired to store drums	X
HD-05	Store drums in temporary dike outside under tarp	X
HD-06	Processes/procedures to make drumming a last resort	
HD-07	If they pass testing/inspection sell drums	X
HD-08	Drum storage in units or F/H	X
HD-09	Send drums to dry fuel storage facility temporarily	X
HD-10	Dedicated drum route by cart on ground or above ground tunnel	
HD-11	Close to HWMB	
HD-12	Drum cleaning (new)	
HD-13	Use a modular drum cleaning unit	
HD-14	Drum reduction program	
HD-15	Pressure test drums (new)	
HD-16	Have sufficient space to safely segregate the drums	
HD-17	Use self priming pump to empty drums	
HD-18	Include drum weigh scales	
HD-19	Easy access for Operations	
HD-20	Receive/ship via loading bay	

Idea Rating Reference

5 – Great Opportunity
4 – Good Opportunity
3 – Some Opportunity
2 – Poor Value
1 – Unacceptable Impacts/Fatal Flaw
ID numbers show linked ideas
D/S – Design Suggestion
EC – Estimate Correction
PO – Project Opportunity
ABD – Already Being Done
OS - Out of Scope
X Abandon

Value Management

Project:	DNGS D_2O Storage Facility	Date:	April 2011
Idea Generation		Sheet:	4 of 7

No	Idea	Rating
HD-21	Benchmark what others do (move drums)	
HD-22	Investigate drum rail system, benchmark	
HD-23	Provision for lifting drums (international shipping)	
HS	**House Staff**	
HS-01	Renovate laundry and lab areas for office space	X
HS-02	Build office space on top of HUMB/TRF	X
HS-03	Enclosed walkway to mitigate zoning restriction (if not adjacent)	
HS-04	Provide new (nicer) trailers	X
HS-05	Move all TRF staff (minus control room) to ESSB	X
HS-06	Office windows to incorporate bird friendly design (reflectivity)	
HS-07	Sleeping quarters for shift workers (pilot project)	
HS-08	Landfill diversion (3 R's)	
HS-09	FSOS office space required (Field Shift Operation Supervisor)	
HS-10	Ability to eat in the TRF/HWMB	
HS-11	Work control office space required	
HS-12	Meets OPG facilities standards	
HS-13	Located next to HWMB/TRF	
HS-14	Operation Section Manager office space required	
HS-15	Hotelling for TRF technical	
HS-16	Expand office to include some existing HWMB offices (five existing offices)	
HS-17	Conference Room – PJB, meetings	
HS-18	Washrooms required	
HS-19	Incorporate LEED standards	
HS-20	Outside access to offices	
HS-21	Gym	
HS-22	Consider future staffing needs of the TRF/HWMB	
MO	**Maintain TRF Operations (during construction)**	
MO-01	Build hoisting rigging equipment for drum transfer	
MO-02	Lay down area outside the fence and J.I.T. delivery	

Idea Rating Reference

5 – Great Opportunity
4 – Good Opportunity
3 – Some Opportunity
2 – Poor Value
1 – Unacceptable Impacts/Fatal Flaw
ID numbers show linked ideas
D/S – Design Suggestion
EC – Estimate Correction
PO – Project Opportunity
ABD – Already Being Done
OS - Out of Scope
X Abandon

Value Management

Project:	DNGS D_2O Storage Facility	Date:	April 2011
Idea Generation		Sheet:	5 of 7

No	Idea	Rating
MO-03	Coordinate with TRF Operations and liaison during construction and outages	
MO-04	Modify TDO loading bay to accommodate drum shipments	
MO-05	AFS new ventilation before constructing new building (to allow work)	
MO-06	Alternate route to construction site (lessen impact on drum shipment and TDO's)	
MO-07	Mobile bulk gasses (He, O_2, Ar) before removing supply	
MO-08	Increase class IV and class II capacity with current project (power)	
MO-09	Provide temporary working location for staff in trailers during construction	
MO-10	Coordinate scheduling and permitting for tie-ins with unit/TRF	
MO-11	Transfer line tie-in will be a challenge (Mods before hand)	
MO-12	Mods for relocation of services prior to construction	
MO-13	Build east of the powerhouse (P/H) to prevent interference with operations	
MO-14	Ensure what you put in you can take out	
RW	**Receive Water**	
RW-01	Above ground piping	
RW-02	Receive water by boat	X
RW-03	Drums only via trailers	X
RW-04	Evaporate then condense	X
RW-05	Buckets by hand	X
RW-06	Carboys by hand or truck	X
RW-07	Below ground piping	
RW-08	TDO's	OS
RW-09	Temporary hoses	X
RW-10	Tankers	
RW-11	Easy access in receiving shipments	
RW-12	Piping interconnections to allow maximum flexibility – unit to any tank	
RW-13	Human factors practices for receiving drums	
RW-14	Use inline pump to empty TDO's	
RW-15	Radio frequency chips for drum tracking and ID	
RW-16	Ability to test if it is contaminated	
RW-17	Separate shipping and receiving warehouse to ease scheduling	

Idea Rating Reference

5 – Great Opportunity
4 – Good Opportunity
3 – Some Opportunity
2 – Poor Value
1 – Unacceptable Impacts/Fatal Flaw
ID numbers show linked ideas
D/S – Design Suggestion
EC – Estimate Correction
PO – Project Opportunity
ABD – Already Being Done
OS - Out of Scope
X Abandon

Value Management

Project:	DNGS D_2O Storage Facility	Date:	April 2011
Idea Generation		Sheet:	6 of 7

No	Idea	Rating
RW-18	Multiple TDO indoor parking	O/S
RW-19	Redesign TDO's and MPTP's (multipurpose transport package) to be stackable	X
RW-20	TDO weigh scale	O/S
SW	**Ship Water**	
SW-01	Maintain flow rate to station	
SW-02	Maintain existing shipping methods	
SW-03	Easy access for flatbed trucks for external customers	
SW-04	Keep shipments from freezing	
SW-05	Built-in crane for shipping containers	
SW-06	Drive through unloading for TDO	
SW-07	Flushing lines to remove GAD	
SA	**Store Water**	
SA-01	Chemical addition in storage tanks for moderator (poison and acid) and PHT (lithium)	
SA-02	Electrolysis and recombination (extract D_2O and store in pressurized tanks)	X
SA-03	2,100m^3 of additional D_2O storage required	
SA-04	Agitator and sampling station for a tank(s) dedicated to poisoned moderator water	
SA-05	Store OPS and refurb D_2O in separate buildings	
SA-06	Tanks filled to 90% capacity	
SA-07	Build more tanks at Pickering	OS
SA-08	Build a D_2O manufacturing facility	X
SA-09	Add isolators to vent system for work protection purposes	
SA-10	Sell some D_2O to reduce storage requirements	X
SA-11	Use tanks that are >100 Mg, why not 300 Mg.	
SA-12	Use ECI storage tanks for refurb	X
SA-13	Pay someone else to store refurb D_2O	X
SA-14	Pump D_2O to a larger (outdoor storage)	X
SA-15	Store D_2O in drums	
SA-16	Store D_2O in tanks at 1 location	
SA-17	Store D_2O on a barge	X

Idea Rating Reference

5 – Great Opportunity
4 – Good Opportunity
3 – Some Opportunity
2 – Poor Value
1 – Unacceptable Impacts/Fatal Flaw
ID numbers show linked ideas
D/S – Design Suggestion
EC – Estimate Correction
PO – Project Opportunity
ABD – Already Being Done
OS - Out of Scope
X Abandon

Value Management

Project:	DNGS D_2O Storage Facility	Date:	April 2011
Idea Generation		Sheet:	7 of 7

No	Idea	Rating
SA-18	Use temporary tanks/tanker	
SA-19	Store water in tanks in multiple locations	
SA-20	Optimize tank sizes	ABD
SA-21	Use temporary tanks for external customers	
SA-22	Store water in another unit in Calandria	X
SA-23	Use TDO to store water	X
SA-24	Elevated tanks stored externally (save space)	X
SA-25	Freeze D_2O and store externally without tanks	X
SA-26	Temporary tanks at D.F.S.F. for refurb duration (dry fuel storage facility)	
SA-27	Use Bruce and Pickering excess storage capacity	X
SA-28	Use train tracks with storage tanks for temporary storage	X
SA-29	Use PNGS helium tanks for temporary storage	X

Idea Rating Reference

5 – Great Opportunity
4 – Good Opportunity
3 – Some Opportunity
2 – Poor Value
1 – Unacceptable Impacts/Fatal Flaw
ID numbers show linked ideas
D/S – Design Suggestion
EC – Estimate Correction
PO – Project Opportunity
ABD – Already Being Done
OS – Out of Scope
X Abandon

THIS PAGE INTENTIONALLY BLANK

APPENDIX G
VE STUDY PROCEDURE

NCE

APPENDIX G VE STUDY PROCEDURE

Value Engineering is a powerful communications approach that focuses on project/process functions. Alternatives to improve performance and/or reduce the cost of ownership are generated to appropriately deliver the functions required for the success of the project.

G.1 Workshop Agenda

The VE workshop followed a standardized agenda (based on the SAVE International Value Methodology Standard, June 2007). The agenda included all phases of the six-step VM Standard – information, function analysis, creativity, evaluation, development, and presentation.

The full agenda for the workshop is presented in **Appendix B** and is summarized in **Exhibit G.1**.

Exhibit G.1 - Simplified Workshop Agenda

Activities
Information Phase
• Presenting an Overview of the Project
• Defining Problem/Opportunities
• Visiting the Site (completed before workshop)
Function Analysis
• Identifying Project Functions/FAST
Creativity
• Defining Value Targets
• Brainstorming Creative Ideas
Evaluation
• Screening the Ideas to be Championed
• Evaluating the Shortlisted Ideas
Development
• Reviewing the Shortlisted Ideas
• Documenting the VE Strategies
Presentation
• Reviewing the Preliminary Results
• Presenting the Preliminary Study Results
• Developing the Path-Forward

G.2 The VE Job Plan

The VE job plan establishes the sequence of activities that must be undertaken to successfully conduct the VE study. There are three stages in the job plan – pre-workshop, workshop, and post workshop. A description of the activities undertaken within each stage follows.

G.2.1 Pre-Workshop Stage

Activities undertaken during the pre-workshop stage were focused on assembling and reviewing the background information for the workshop.

A walk-down was undertaken to review the existing site conditions prior to the workshop due to security reasons.

The project team provided an overview of the project and the status of the design. The design information available included drawings, a design report, and a cost estimate.

G.2.2 VE Workshop

Selected activities within each of the six workshop phases are briefly described in the following sub-sections.

G.2.2.1 Information Phase

During the information phase of the workshop, the VE team confirmed their collective understanding of the situation. The team then identified the following project goals, constraints, and commitments:

Goals

The identified goals include:

- increasing the storage capacity for D_2O water
- increasing the operational flexibility of the TRF
- completing the project in four years
- adding drum storage and office space
- consolidating the TRF operations into one location to improve staff efficiency and morale
- protecting the environment
- ensuring that TRF staff can operate facility.

Constraints

The identified constraints include:

- ensuring that the TRF facility will be operational during construction to maintain safety at all times
- the D_2O storage component of the project must be completed to accommodate the needs of the planned refurbishment project

- meeting the budget
- meeting the regulatory needs
  - nuclear class components
  - CNSC approval of the site
  - environmental assessment
  - Certificate of Approval (Ontario Ministry of the Environment)
  - licence to operate.
- available site locations
  - physical proximity
  - campus planning
  - has to tie into existing infrastructure
  - contaminated land/water (site A&B)
- OPG needs to quickly decide on scope/work to contract with provider/consultant
- disposal of construction waste
- nuclear security requirements
- impacts to other operations due to road closures
- supply chain procurement constraints (staffing/process)
- providing storage to accommodate refurbishment of at least one unit
- suppliers may not be able to provide equipment in time
- addressing the legacy issues associated with previous tritium releases.

Commitments

The identified commitments include:

- ensuring that the facility is available for service (AFS) by April 2015
- ensuring that the project is revenue-positive
  - stakeholders
  - contractor performance
- ensuring better support for TRF customers by
  - being able to accept tritium year-round
  - building up a buffer supply of detritiated heavy water
- reducing the burden on TRF operations and maintenance staff
- supporting DNGS to ensure that the plant is able to produce the power as committed

- committing to the scope
- needing to complete the project on-time and on-budget to further enhance OPG's image
- ensuring environmentally sustainable design practice.

G.2.2.2 Function Analysis Phase

The success of any VE study is predicated on the VE team being focused on the right problem or opportunity.

Value engineering is a team-oriented review process in a workshop format, focused on the functions that the project, product, or process must successfully deliver. During the workshop, the VE team identified the functions using the function determination technique. (Refer to **Appendix E**). The functions that must be performed were identified and categorized during the workshop (refer to **Appendix E**). The full VE team participated in this activity during the workshop to determine the interdependency and interrelationships of the project functions.

A Function Analysis System Technique (FAST) function diagram was prepared during the workshop to graphically document the interrelationship and interdependencies of the functions. The FAST diagram is presented in **Appendix E**.

G.2.2.3 Creativity Phase

The VE team utilized several study targets (reference codes are indicated as well) from the functions identified to guide the creativity phase of the workshop. The Team generated **172** ideas (the long list) to potentially improve the project. These ideas are listed in **Appendix F**.

G.2.2.4 Evaluation Phase

The goal of the VE study is to improve value. Value is best defined as having a proportional relationship with function (quality or performance) and cost (monetary, time, environmental impact, etc.). The relationship between value, function, and cost is expressed as:

$$\text{Value} \sim \text{Function/Cost}$$

One objective of the evaluation phase of the VE study was to reduce the number of ideas to a manageable number that represent the best ideas, or those ideas that have the greatest opportunity for acceptance. A two-stage evaluation process was initially utilized to reduce the number of ideas.

Stage 1 Evaluation

The first stage of the evaluation focused on eliminating duplicate or very similar ideas and then identifying promising ideas. Combining dependant ideas was also considered. The VE team members worked as a group to identify a shortlist from the long list of ideas generated.

The VE team reviewed the long list of ideas developed during the creativity session and identified a number of ideas that should not receive further consideration (out of scope, limited opportunity to secure approval within a reasonable timeframe, not technically feasible, etc.). This is recorded in **Appendix F**.

Stage 2 Evaluation

The second stage of the evaluation involved reviews by sub-teams to identify which ideas that team felt should be carried forward into the development of possible refinements of the strategy.

G.2.2.5 Development Phase

Each of the selected ideas was reviewed, and sometimes bundled with other ideas to create possible strategies to address the project needs.

G.2.2.6 Presentation Phase

The preliminary results were discussed by the project team at the end of the workshop. A path-forward was developed.

G.3 Post-Workshop Activities

The post-workshop activities included the review of the input from the VE workshop and the preparation of this report.

THIS PAGE INTENTIONALLY BLANK