RCM Technologies
The Source of Smart Solutions

CORRECTIVE ACTION REQUEST

CAR Number: 2013-59	**Date:** 04 Nov 2013	**Project:** 13720

Requirement:
Per OP-4160 the Field Change process is only applicable if the proposed change is a "non-intent" change

Deficiency:
DEC 123123-R001 FIC#4 included changes to the method of supporting the pipe and cutting a hole in a section of floor grating. Both these changes should have been design intent revisions to the EC, not field changes. Cutting the floor grating required an assessment of the calculations to determine whether the grating was still capable of supporting the required loads. Changing pipe supports, which is what was done when it was determined that the anchors for the specified supports could not be installed so the support base plates were enlarged under the FC and sandbags were used to weigh them down in lieu of anchors, also requires an engineering assessment to confirm there is adequate support for the piping.
The Field Change went through preparation, verification, and approval without anyone catching that two of the requested changes did not meet the requirements to be performed as field changes per OP-4160.

This condition was identified while reviewing OPG SCR D-2013-17008. The SCR identified issues with the quality of changes delivered to OPG but did not discuss the appropriateness of using the Field Change process.

Originator: Michael Gerard **Date:** 04 Nov 2013

Please Forward this Corrective Action Request to the Quality Assurance Manager

Responsible Manager: Craig Sellers, VP and Chief Engineer

Cause of Condition:
Lack of familiarity with the process and lack of rigour applied by those involved with the preparing, verifying, and approving the Field Change.

Actions Required to Correct the Condition: (Include required completion date for these actions)
Field Change needs to be revised and identified changes progressed as a Design EC intent revision. Staff involved with this Field Change will be coached.

Status: Complete

Corrective Actions Required to Prevent Recurrence: (Include required completion date for these actions)
1) Management needs to reinforce the expectation that procedures are to be used continuously and if an individual is in doubt then stop and ask for clarification from their manager before proceeding. A mandatory reading assignment for all design staff will be prepared to reinforce expectations. TCD: Nov. 29/13
2) A rollout of the Field Change procedure will be presented to all design and project staff using OP-4160. TCD: Jan. 15/14.

Cause Identified and Corrective Actions Established By:	**Responsible Manager:** Craig Sellers	**Date:** 06-Nov-2013
Cause Identified and Corrective Actions Concurred By:	**QA Manager:**	**Date:** 06 NOV 2013

TO BE COMPLETED BY QA DEPT

Severity Level: ☐ Level 1 ☒ Level 2 ☐ Level 3 ☐ Level 4

Potentially 10CFR21 Reportable? ☐ Yes ☒ No

RCM Technologies
The Source of Smart Solutions

CORRECTIVE ACTION REQUEST

CAR Number: 2013-59	**Date:** 04 Nov 2013	**Project:** 13720
Condition Corrected and All Corrective Actions Completed:	**Responsible Manager:** Craig Sellers	**Date:** 16 Dec 2013
Corrective Actions Verified and CAR Closed:	**QA Manager:**	**Date:** 19 DEC 2013
Review of Completed CAR:	**Senior VP / VP:**	**Date:** 19 Dec 2013
Implementation Effectiveness Review Completed:	**QA Manager:**	**Date:**
Corrective Actions Effective:	☐ Yes ☐ No: CAR Number	**Category:**

Engineering Change

EC Number : 0000123123 002
Facility : D
Type/Sub-type: MOD DSGN

Print Date: 19DEC2013

ONTARIO POWER GENERATION

Page: 1

Topic : EC REVISIONS
From Panel : TIME100

Last Updated By :
Last Updated Date:
Text Status :

DEC 123123 R00
Initial Issue of EC - 14AUG2013
DEC 123123 R01 (design non-intent change)
NK38-BOM-12320-10001 has been revised per procurement inputs, to change Cat IDs for more readily available items.
DEC 123123 R02 (design intent change)
Important Notes:
" Item 1 part of the FC# 13720-FC-00018, R00 (FICREQ04) ("OPG FE has scanned the areas prior to anchor install for the pipe supports there are numerous electrical interferences in the area where the vertical riser meets the roof. OPG FE has requested that we avoid anchoring into the entire area from where the overhang is north to the grating. Therefore, the first two HG3 style supports after our pipe meets the roof running north will not be able to be anchored to the roof. Suggest using a steel base plate welded to these supports with the use of sandbags to secure the supports that cannot be anchored") was incorrectly treated as a Field Change (non-intent change). Internal Corrective Action Request (CAR-2013-59) has been initiated for the error (the changes to modify the pipe supports and hold down with sand bags are considered a design intent change).
" Paragraph 1 of the FC# 13720-FC-00007, R00 (FICREQ01) ("Enlarge the existing penetration to accommodate the 8" pipe and angle the pipe into this penetration by using a 45? elbow upstream of the outlet") was incorrectly treated as a Field Change (non-intent change). Internal Corrective Action Request (CAR- 2013-59) has been initiated for the error (the change to cut the hole in the grating is considered a design intent change).
As a result, design intent change revision (Revision 02) was initiated to incorporate design intent changes for the pipe supports and for cutting the hole in the grating (see description above).
Part of Revision 02, all the outstanding FICREQ's were also incorporated [i.e., FICREQ01 (rest of items), FICREQ02, FICREQ03, FICREQ04 (rests of items), FICREQ05, FICREQ06, FICREQ07, FICREQ08, FICREQ09].

RCM Field Change Number	OPG Field Change Number
13720-FC-00007	FICREQ01
13720-FC-00024	FICREQ02
13720-FC-00013	FICREQ03
13720-FC-00018	FICREQ04
13720-FC-00020	FICREQ05
13720-FC-00027	FICREQ07
13720-FC-00032	FICREQ08
13720-FC-00040	FICREQ09
13720-FC-00035	FICREQ06

Engineering Change

EC Number : 0000123123 002
Facility : D
Type/Sub-type: MOD DSGN

Print Date: 19DEC2013

ONTARIO POWER GENERATION

Page: 2

The following documents are affected by this revision of the EC:

1. NK38-DRAW-12320-10001
2. NK38-D0H-15100-1009
3. NK38-D0H-15100-1007
4. NK38-BOM-12320-10001

The following two drawings were on the ADL as part of Rev 000 and Rev 001 of the EC, however they are removed for Rev 002:

1. NK38-D0A-28330-0001
2. NK38-D0H-28316-0001

Engineering Change

Print Date: 19DEC2013

EC Number : 0000123123 002
Status/Date : INSTALLD 29NOV2013
Facility : D
Type/Sub-type: MOD DSGN

ONTARIO POWER GENERATION

Page: 1

EC Title: 0-12320 - TMOD - DNGS HEAVY WATER MANAGEMENT BUILDING WEST ANNEX TEMPORARY CONSTRUCTION DEWATERING SYSTEM PROJECT ID 16-31555

Mod Nbr : DNREFURB KW1: MECH KW2: DSGN KW3: FIC KW4: TMOD KW5:

Master EC :	N	Work Group :		Temporary :	Y
Outage :	N	Alert Group:	NRDEM	Aprd Reqd Date:	
WO Required :		Image Addr :		Exp Insvc Date:	
Adv Wk Appvd:		Alt Ref. :		Expires On :	
Auto-Advance:	N	Priority :		Auto-Asbuild :	N
Caveat Outst:		Department :		Discipline :	
Resp Engr :	KABLAWI		RAID		
Location :					

Milestone	Date	Req By	
DSGN I/C ACCEPT	01NOV2013	MODIFIED	
PassPort: KABLAWIR	Name:	KABLAWI	RAID
ENVIRO SM REL#1	19AUG2013		
PassPort: DALYR	Name:	DALY	ROGER
ENVIRO SM REL#2	28OCT2013		
PassPort: DALYR	Name:	DALY	ROGER
FINAL AFS	26NOV2013	MODIFIED	
PassPort: TUTSCHS	Name:	TUTSCH	STEPHEN
OPG DE ACCEPTED	25OCT2013	APPROVED	
PassPort: DUTTARAA	Name:	DUTTA RAY	ANINDA
PREPARED BY	25OCT2013		
PassPort: COSOVICR	Name:	COSOVIC	RANKO
REL #1 APPR	19AUG2013		
PassPort: DALYR	Name:	DALY	ROGER
REL #2 APPR	28OCT2013		
PassPort: BLACKRO	Name:	BLACK	ROBERT KENNETH
SM DESIGN APPR	25OCT2013	APPROVED	
PassPort: BLACKRO	Name:	BLACK	ROBERT KENNETH
VERIFIED BY	25OCT2013	APPROVED	
PassPort: LIUXIANJ	Name:	LIU	XIANJIE (LEO)

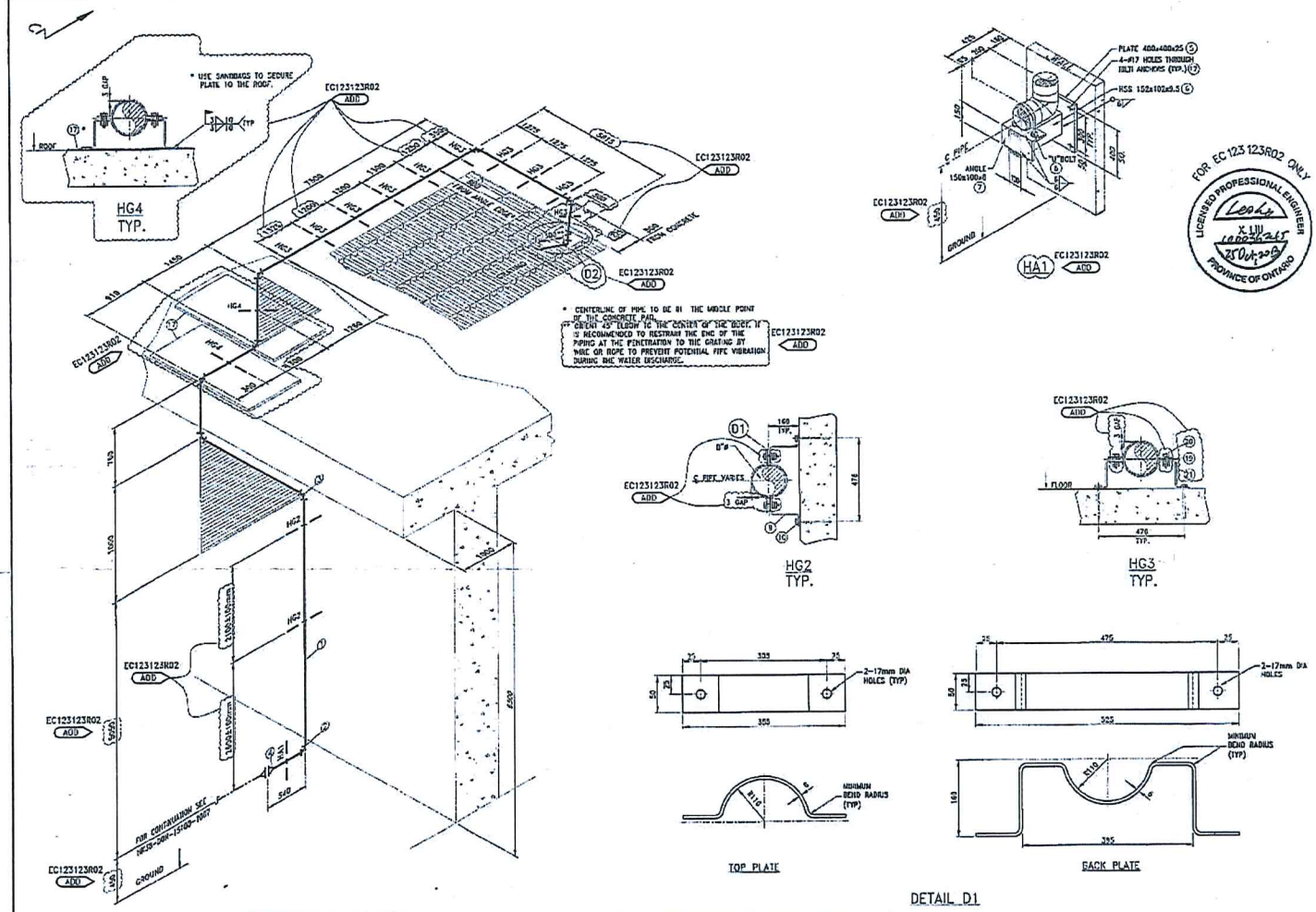

NOTES:

1. INSTALLATION, FABRICATION AND WELDING IN ACCORDANCE WITH DPG N-SAW-01110-10002.
2. WELDING SHALL BE IN ACCORDANCE WITH DPG WELDING PROCEDURE N-SAW-01800-10000 OR EQUIVALENT APPROVED WELDING PROCEDURE.
3. DIMENSIONS TO BE FIELD VERIFIED.
4. INSTALLATION, FABRICATION AND SUPPORTS TO SUIT FIELD CONDITIONS.
5. GASKET BOLTED JOINT ASSEMBLIES FOLLOW N438-MAP-72330-05.
6. USE OF SUPPORT WELDS SHALL BE VISUAL IN ACCORDANCE WITH CSA B51-09 AND UPDATE 1.
7. THE CODE EFFECTIVE DATE FOR THE MODIFICATION IS CSA N285.0-08/N285.6 SERIES-09 UPDATE 2 CSA B51-09 UPDATE 1.
8. HDPE PIPING CONNECTION: BUTT HEAT FUSION.
9. USE FULL ELECTROFUSION COUPLING IF REQUIRED BURIED PIPING ASSEMBLY (ITEM (1) ON BOM). USE MECHANICAL COUPLING (ITEM (2) ON BOM) GRAVLOK FIG.7005 AS ALTERNATIVE TO ELECTROFUSION COUPLING (ITEM (1) ON BOM). LUBRICANT (ITEM (3)) IS REQUIRED FOR COUPLING GASKET.
10. HEAT TRACING AND ADEQUATE INSULATION TO BE INSTALLED ON ENTIRE PIPING LENGTH.
11. FABRICATE PIPE SUPPORT HG2 AND HG3 AS PER DETAIL "D1" IF CATALOG ITEM IS NOT AVAILABLE.
12. NO PULLOUT TEST REQUIRED FOR ANCHORAGE.
13. ENLARGE THE EXISTING GRATING PENETRATION TO ACCOMMODATE FOR 8" PIPE (SEE DETAIL "D2").
14. CUTTING OF REBAR IS NOT PERMITED

REFERENCES:

BILL OF MATERIAL — NK38-BOM-12320-10001
REFERENCE DRAWINGS — NK38-DGN-27151-5017; NK38-DGN-27151-2005; NK38-DGN-15103-1007

ANCHORAGE NOTES:

1. ALL ANCHORS SHALL BE HILTI M10.
2. TORQUE INSTALLATION: 35Nm FOR HS-SS, 35Nm FOR HS-R.
3. MINIMUM HOLE DEPTH: 90mm.
4. DRILL BIT: 15mm.
5. MIN. DIAMETER IN PLATE: 17mm.
6. EFFECTIVE EMBEDMENT DEPTH: 70mm
7. CONCRETE ANCHORS TO BE INSTALLED AS PER MANUFACTURING (HILTI) INSTRUCTIONS.

DISASSEMBLY NOTES AT TMOD COMPLETION:

1. ANCHORS TO BE REMOVED AS PER MANUFACTURER INSTRUCTIONS.
2. ANCHOR HOLES SHALL BE GROUTED USING SIKA 221 (13).

DND ☒ PND ☐

Document Number: NK38-DRAW-12320-10001 Rev.
EC # 123123 Rev. 002
Master EC # 122797 Rev. 000
Total Number of Pages 1
THIS ENGINEERING CHANGE PAPER IS APPROVED FOR USE
Prepared by: R. Gosavic Date: 25-Oct-2013
Verified by: L. Liu Date: 25 Oct 2013
Approved by: R. Black Date: 25 OCT 13

EC123123R02

DRAWING REVISED AS PER 13720-FC-00007, 13720-FC-00018, 13720-FC-00024, 13720-FC-00032, 13720-FC-00035 AND 13720-FC-00040, AS PER EC123123R02.

EC123123

DRAWING PRODUCED AS PER EC123123.

DARLINGTON GS 0

TMOD
DEWATERING
PIPING DETAIL

ONTARIOPOWER GENERATION — Plant Design / Mechanical Design

DD drawn by: | Eng designed by: | For original signature see revision 000.
DD checked by: | Eng verified by:
date of issue: | Eng approved by:

SCALE: N.T.S. | SIZE TYPE: ISO | DWG SIZE: A1

DWG NO. NK38-DRAW-12320-10001

RCM Technologies Canada Corp.

13720-DRAW-01109

ONTARIOPOWER GENERATION — Darlington Nuclear

ACCEPTED ☐
ACCEPTED AS NOTED ☒
REVISE AND RESUBMIT ☐

Signature / Date 25 OCT 2013
Name:
Department: POWER DESIGN ONLY

THIS ACCEPTANCE DOES NOT RELIEVE THE CONTRACTOR FROM RESPONSIBILITY FOR ERRORS OR OMISSIONS OR FROM ANY OBLIGATIONS OR LIABILITY UNDER THIS CONTRACT.

*Arrange sandbags to avoid reduce tripping hazards to workers while maintaining their intent for use. See Work Package 13720-FC-00005 for safe installation assessment. 25 OCT 2013

A1 (950 x 841)

RCM Technologies
The Source of Smart Solutions

BRIEFING CARD

Field Changes and Procedural Compliance

Ref: CAR 2013-59

BACKGROUND

This Briefing Card is intended to make it clear that governance must be followed. There have been numerous examples where we have not complied with procedures. The most recent case, the one that led to initiation of this Briefing Card is related to Field Changes but it is just another example of a continuing trend that must stop. Noncompliance issues include:

OPG Engineering Change Control (ECC):

- we did not include items in the Issue Tracking File (ITF) as required
- we have deviated from Commissioning Specifications without revising them
- we have failed to obtain regulatory approvals when required (fortunately realized before installation but caused delays)

RCM Procedures:

- We have not used DCRs to create or revise internal documents
- We did not consistently use verification sheets
- Mentors did not co-sign as preparers for unqualified staff

Subject CAR (2013-59):

DEC 123123-R001 FIC#4 included changes to the method of supporting the pipe and cutting a hole in a section of floor grating. Both these changes should have been design intent revisions to the EC, not field changes.

Cutting the floor grating required an assessment of the calculations to determine whether the grating was still capable of supporting the required loads. The assessment could only be done by an engineer and therefore this was an intent change.

Changing pipe supports requires an engineering assessment to confirm there is adequate support for the piping. In this case it was determined that the anchors for the specified supports could not be installed so the support base plates were enlarged under the FC and sandbags were used to weigh them down in lieu of anchors; this constituted a change to the pipe supports, and therefore was an intent change.

Intent changes cannot be performed as Field Changes, they must be performed as EC revisions.

The Field Changes went through preparation, verification, and approval without anyone catching that two of the requested changes did not meet the requirements to be performed as field changes per OP-4160.

This condition was identified while reviewing OPG SCR D-2013-17008 which identified issues with the quality of changes delivered to OPG.

There have been other examples of staff trying to progress changes as Field Changes that did not meet the requirements of a field change. Most recently it was requested to make a field change to a system that had been returned to service post commissioning but because we had requested approval to delay the AFS meeting we had not yet had a formal AFS declaration completed. Although the AFS was delayed the system had been turned over to Operations and we cannot perform a Field Change on a system that

has been energized or turned over. This is requirement is clearly stated in OP-4160 and in OPG governance.

As a result of the subject CAR specific training related to Field Changes has been developed and delivered.

MESSAGE TO CONVEY

It is required that all RCM Technologies staff comply with all applicable governance, if in doubt or you believe the governance may be in error, stop and seek guidance from your supervisor.

Related Requirements:

General

QAP-01-1 Section 3.3, states "*assures that all company personnel comply with the requirements of the approved QA manual and all supporting procedures*".

The COIR, N-COI-00120-00001-R000, Clause 2.2.1, states "*OPG procedures shall be followed and OPG requirements met for all work unless otherwise approved by OPG*".

Specific to Field Changes

N-PROC-MP-0090, Modifications, Clause E.1.5 states:

``*FIC is a proposed **non-intent** change to add, remove, remove, or change .....* ``

N-PROC-MP-0090, Modifications, Clause E.2.2 states:

``*Pressure tests and any other tests that energize the system should **not** be performed prior to the incorporation of any associated FIC request(s) into an approved Design EC Revision*``.

From this clause on energization it needs to be understood that FICs (or RCM Field Changes) cannot be initiated once the system has been energized, even if only for commissioning.

RCM Procedure, OP-4160, Non-intent Deviations for Darlington Refurbishment Project, Section 3.3.1 states (note the definition of non-intent was derived using OPG document NK38-GUID-01900-10002), "a non-intent design deviation is any change that doesn't require a design engineer to provide technical input to the change". Examples are included in the procedure and guidance on how to make the determination is provided in form, OP-4160-F00.

WHAT DOES SUCCESS LOOK LIKE?

All governance will be strictly adhered to. In order to comply with governance individuals will make themselves aware of the governance requirements by reading the QAP and OPG

procedures that apply to the work that they are doing; ignorance of the requirements is not a defence for non-compliance. If in doubt individuals will stop and ask a supervisor or subject matter expert before proceeding.

The QAP procedures are available on the RCM intranet. The OPG procedures are available in Asset Suite or by using Power Search (hint: all OPG forms reference the applicable procedures in the footer).

Sign off of the Required Reading Sheet acknowledges that you have read, understand, and will comply with these requirements. The sign off sheet is located at the 895 Brock St. Office Reception Area.