Chapleau Public Utilities Corporation
MP ID # 102049

Chapleau MTS T3
Located at Chapleau TS
Beside 1 Waterplant Rd., Chapleau, ON

TS Supplying this feeder:
(Defined point of Sale)
Chapleau-115.T3

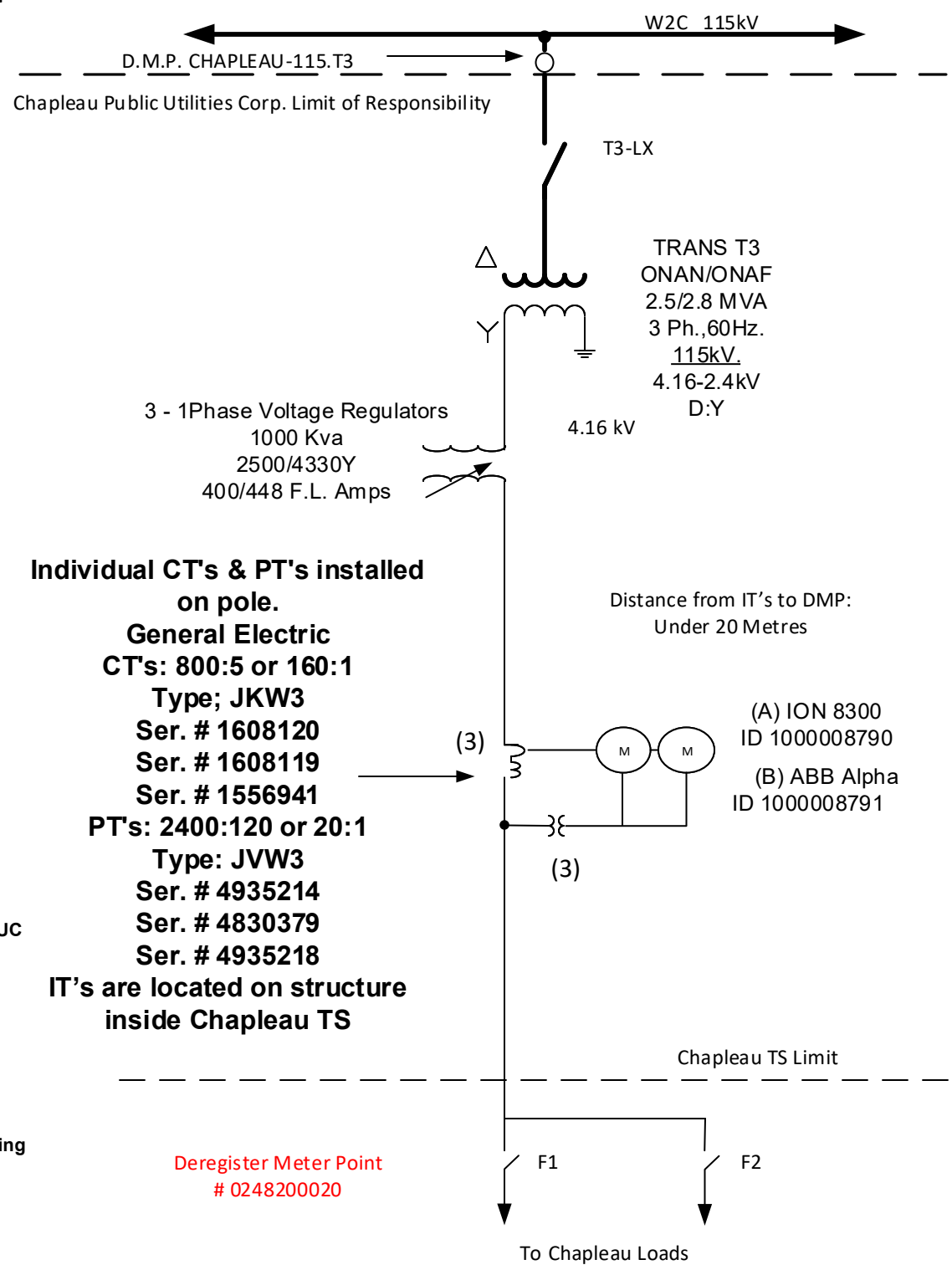

Metering Installation Data
(to be provided for each MI displayed)

1. Meter Point IDs
   A ..... 1000008790 (ION 8300)
   B..... 1000008791 (ABB Alpha)
2. IT RATIO:
   CT ratio (3)
   A/B meter available 800 : 5 or 160:1
   PT ratio (3)
   A/B meter available 2400:120 or 20 : 1
3. ANSI class:
   A/B meter CT class 0.3B2.0
   MC Approval Number: SD-EA.390

   A/B meter PT class 0.3WXY, 1.2Z
   MC Approval Number: SD-EA.391
4. Meter(s) Source of Auxillary Power
   Main Meter: 120 VAC Auxillary Supply
   Alternate Meter: 120 VAC supplied from PT's
5. MSP name: Peterborough Utilities Services Inc.
6. MSP ID #: 1002
7. Defined Meter Point ID: ChapleauMS-115.T3
   (also referred as Defined Point of Sale)
8. Energy Delivery Point ID: 100695
   Energy Delivery Point Name: CHAPLEAU-LT.TT_LF
   (also referred to as Resource ID)
   Connection Delivery Point ID:103658
   Connection Delivery Point Name TC_CHAPLEAU_CHAPPUC
   Network Delivery Point ID: 102841
   Network Delivery Point Name: TN_CHAPLEAU_CHAPPUC
9. Is MI Blondel compliant (Y/N)? Y
10. Host Distributor's name: INTENTIONALLY LEFT BLANK
11. Distance between CT's & PT's: Zero (0)
12. Power Switching: This MI is not subject to Power Switching

Peterborough Utilities Services Incorporated

Title	Chapleau Public Utilities Corporation Chapleau TS T3		Scale	NTS	Revisions		Date
Address	Chapleau MTS Beside 1 Waterplant Rd., Chapleau, ON		SO95-2-37 Job Cost		1	Change TS Name Change Address Change DMP and MI Limits of Responsibility Add Transformer Cooling Rating Change PT Accuracy Class	20040813
Drawn By	Terry McConnell		Drawing Number MSP B000081 Rev.2	TEM 20040719			
Approved By		Date : 20041001			2	Added Feeder Switches & AVR	20040928